Massachusetts Cannabis Control Commission

Marijuana Cultivator

General Information:

License Number: MC282431

Original Issued Date: 06/11/2020

Issued Date: 08/12/2021

Expiration Date: 08/16/2022

ABOUT THE MARIJUANA ESTABLISHMENT

Business Legal Name: Holistic Health Group Inc

Phone Number: 774-419-3888 **Email Address:** tmcnamara@holistichealthgroup.org

Business Address 1: 477 Wareham Street **Business Address 2:**

Business City: Middleborough **Business State:** MA **Business Zip Code:** 02346

Mailing Address 1: PO Box 231 **Mailing Address 2:**

Mailing City: Middleborough **Mailing State:** MA **Mailing Zip Code:** 02346

CERTIFIED DISADVANTAGED BUSINESS ENTERPRISES (DBES)

Certified Disadvantaged Business Enterprises (DBEs): Not a DBE

PRIORITY APPLICANT

Priority Applicant: yes

Priority Applicant Type: RMD Priority

Economic Empowerment Applicant Certification Number:

RMD Priority Certification Number: RPA201867

RMD INFORMATION

Name of RMD: Holistic Health Group Inc

Department of Public Health RMD Registration Number: RPA201867

Operational and Registration Status: Obtained Provisional Certificate of Registration only

To your knowledge, is the existing RMD certificate of registration in good standing?: yes

If no, describe the circumstances below:

PERSONS WITH DIRECT OR INDIRECT AUTHORITY

Person with Direct or Indirect Authority 1

Percentage Of Ownership: **Percentage Of Control:**

Role: Board Member **Other Role:** Executive / Officer

First Name: Tim **Last Name:** McNamara **Suffix:**

Gender: Male **User Defined Gender:**

What is this person's race or ethnicity?: White (German, Irish, English, Italian, Polish, French)

Specify Race or Ethnicity:

Person with Direct or Indirect Authority 2

Percentage Of Ownership: 100 **Percentage Of Control:** 100

Role: Owner / Partner **Other Role:** Executive / Officer

First Name: Paul **Last Name:** Ofria **Suffix:**

Gender: Male **User Defined Gender:**

What is this person's race or ethnicity?: White (German, Irish, English, Italian, Polish, French)

Specify Race or Ethnicity:

Person with Direct or Indirect Authority 3

Percentage Of Ownership: **Percentage Of Control:**

Role: Board Member **Other Role:**

First Name: Kenneth **Last Name:** Ofria **Suffix:**

Gender: Male **User Defined Gender:**

What is this person's race or ethnicity?: White (German, Irish, English, Italian, Polish, French)

Specify Race or Ethnicity:

ENTITIES WITH DIRECT OR INDIRECT AUTHORITY

No records found

CLOSE ASSOCIATES AND MEMBERS

No records found

CAPITAL RESOURCES - INDIVIDUALS

No records found

CAPITAL RESOURCES - ENTITIES

Entity Contributing Capital 1

Entity Legal Name: Frankie Investments LLC **Entity DBA:**

Email: pofria@gmail.com **Phone:** 508-494-5771

Address 1: 202 Wood st **Address 2:**

City: Hopkinton **State:** MA **Zip Code:** 01748

Types of Capital: Debt **Other Type of Capital:** **Total Value of Capital Provided:** $1200000 **Percentage of Initial Capital:** 100

Capital Attestation: Yes

BUSINESS INTERESTS IN OTHER STATES OR COUNTRIES

No records found

DISCLOSURE OF INDIVIDUAL INTERESTS

No records found

MARIJUANA ESTABLISHMENT PROPERTY DETAILS

Establishment Address 1: 477 Wareham st

Establishment Address 2:

Establishment City: Middleborough **Establishment Zip Code:** 02344

Approximate square footage of the Establishment: 34000 **How many abutters does this property have?:** 2

Have all property abutters have been notified of the intent to open a Marijuana Establishment at this address?: Yes

Cultivation Tier: Tier 03: 10,001 to 20,000 sq. ft **Cultivation Environment:** Indoor

FEE QUESTIONS

Cultivation Tier: Tier 03: 10,001 to 20,000 sq. ft **Cultivation Environment:** Indoor

HOST COMMUNITY INFORMATION

Host Community Documentation:

Document Category	Document Name	Type	ID	Upload Date
Community Outreach Meeting Documentation	Community Outreach Documentation.pdf	pdf	5e5433a84fa2b004756a3ea4	02/24/2020
Plan to Remain Compliant with Local Zoning	Plan to Remain Compliant with Local Zoning.pdf	pdf	5e54342ffe55e40432f72a93	02/24/2020
Certification of Host Community Agreement	Middleborough Host Community Agreement Certification.pdf	pdf	5e5436157b9883042b374401	02/24/2020

Total amount of financial benefits accruing to the municipality as a result of the host community agreement. If the total amount is zero, please enter zero and provide documentation explaining this number.: $234363.75

PLAN FOR POSITIVE IMPACT

Plan to Positively Impact Areas of Disproportionate Impact:

Document Category	Document Name	Type	ID	Upload Date
Plan for Positive Impact	Plan for Positive Impact.pdf	pdf	5e693417f63398441bbc0c12	03/11/2020

ADDITIONAL INFORMATION NOTIFICATION

Notification: I Understand

INDIVIDUAL BACKGROUND INFORMATION

Individual Background Information 1

Role: **Other Role:**

First Name: Tim **Last Name:** McNamara **Suffix:**

RMD Association: Not associated with an RMD

Background Question: yes

Individual Background Information 2

Role: **Other Role:**

First Name: Paul **Last Name:** Ofria **Suffix:**

RMD Association: Not associated with an RMD

Background Question: no

Individual Background Information 3

Role: **Other Role:**

First Name: Kenneth **Last Name:** Ofria **Suffix:**

RMD Association: Not associated with an RMD

Background Question: no

ENTITY BACKGROUND CHECK INFORMATION

Entity Background Check Information 1

Role: Investor/Contributor **Other Role:**

Entity Legal Name: Frankie Investments LLC **Entity DBA:**

Entity Description: Investment Company

Phone: 508-494-5771 **Email:** pofria@gmail.com

Primary Business Address 1: 202 Wood st **Primary Business Address 2:**

Primary Business City: Hopkinton **Primary Business State:** MA **Principal Business Zip Code:** 01748

Additional Information:

MASSACHUSETTS BUSINESS REGISTRATION

Required Business Documentation:

Document Category	Document Name	Type	ID	Upload Date
Secretary of Commonwealth - Certificate of Good Standing	Secretary of Commonwealth - Certificate of Good Standing.pdf	pdf	5dce1292160e3b57a3dd22de	11/14/2019
Department of Revenue - Certificate of Good standing	Department of Revenue - Certificate of Good standing.pdf	pdf	5dce129e8bdcfd57ae525b08	11/14/2019
Bylaws	Bylaws.pdf	pdf	5dce12ac9c1081532b9a537f	11/14/2019
Articles of Organization	Articles of Organization.pdf	pdf	5dce12b8a9ef3857c44597e5	11/14/2019

Certificates of Good Standing:

Document Category	Document Name	Type	ID	Upload Date
Department of Unemployment Assistance - Certificate of Good standing	Certificate of Compliance 22177569.pdf	pdf	60f70889504b25036f7592ff	07/20/2021
Secretary of Commonwealth - Certificate of Good Standing	Certificate of good standing Comm Of MA 7 12 21.pdf	pdf	60f7088a0bb484027d8c0d59	07/20/2021
Department of Revenue - Certificate of Good standing	DOR Certificate of Good Standing.pdf	pdf	60f7088c629ad9037af22694	07/20/2021

Massachusetts Business Identification Number: 001336523

Doing-Business-As Name:

DBA Registration City:

BUSINESS PLAN

Business Plan Documentation:

Document Category	Document Name	Type	ID	Upload Date
Business Plan	2021 Business Plan.pdf	pdf	60ec693974b6080359f70def	07/12/2021
Plan for Liability Insurance	Plan to obtain insurance.pdf	pdf	60ec693addf0e402a870eb7d	07/12/2021
Proposed Timeline	HHG - Indoor timeline.pdf	pdf	60f72ecdda52e3026d4646a1	07/20/2021

OPERATING POLICIES AND PROCEDURES

Policies and Procedures Documentation:

Document Category	Document Name	Type	ID	Upload

				Date
Policies and Procedures for cultivating.	Cultivation procedures 2021.pdf	pdf	60f70903fb983a0274aafccf	07/20/2021
Diversity plan	Diversity Plan.pdf	pdf	60f709047a4b3b034a683383	07/20/2021
Inventory procedures	Inventory Procedures.pdf	pdf	60f7090684f3fe0296c4459a	07/20/2021
Personnel policies including background checks	Personnel Polices.pdf	pdf	60f7090874b6080359f7321d	07/20/2021
Maintaining of financial records	Maintaining of financial records.pdf	pdf	60f7090a629ad9037af2269e	07/20/2021
Quality control and testing	Quality Control & Testing Procedures.pdf	pdf	60f709228d6c3f02b7d1e257	07/20/2021
Record Keeping procedures	Record Keeping Procedures.pdf	pdf	60f70924aa87100331f66e17	07/20/2021
Restricting Access to age 21 and older	Restricting Access to age 21 and older.pdf	pdf	60f70924fb983a0274aafcd3	07/20/2021
Prevention of diversion	Prevention of Diversion Plan.pdf	pdf	60f709257a4b3b034a683387	07/20/2021
Qualifications and training	Qualifications and training.pdf	pdf	60f7092674b6080359f73221	07/20/2021
Separating recreational from medical operations, if applicable	Separating recreational from medical operations.pdf	pdf	60f709413678b8028bd46a2b	07/20/2021
Storage of marijuana	Storage of marijuana.pdf	pdf	60f709421159b60338d50b1a	07/20/2021
Transportation of marijuana	Transportation Plan.pdf	pdf	60f7094384f3fe0296c4459e	07/20/2021
Security plan	Security Plan.pdf	pdf	60f709442ea73e036476e419	07/20/2021
Energy Compliance Plan	Energy Usage and CCC Regulations Compliance 1809260 (BW).pdf	pdf	60f7095b84f3fe0296c445a4	07/20/2021

ATTESTATIONS

I certify that no additional entities or individuals meeting the requirement set forth in 935 CMR 500.101(1)(b)(1) or 935 CMR 500.101(2)(c)(1) have been omitted by the applicant from any marijuana establishment application(s) for licensure submitted to the Cannabis Control Commission.: I Agree

I understand that the regulations stated above require an applicant for licensure to list all executives, managers, persons or entities having direct or indirect authority over the management, policies, security operations or cultivation operations of the Marijuana Establishment; close associates and members of the applicant, if any; and a list of all persons or entities contributing 10% or more of the initial capital to operate the Marijuana Establishment including capital that is in the form of land or buildings.: I Agree

I certify that any entities who are required to be listed by the regulations above do not include any omitted individuals, who by themselves, would be required to be listed individually in any marijuana establishment application(s) for licensure submitted to the Cannabis Control Commission.: I Agree

Notification: I Understand

I certify that any changes in ownership or control, location, or name will be made pursuant to a separate process, as required under 935 CMR 500.104(1), and none of those changes have occurred in this application.: I Agree

I certify that to the best knowledge of any of the individuals listed within this application, there are no background events that have arisen since the issuance of the establishment's final license that would raise suitability issues in accordance with 935 CMR 500.801.: I Agree

I certify that all information contained within this renewal application is complete and true.: I Agree

ADDITIONAL INFORMATION NOTIFICATION

Notifcation: I Understand

COMPLIANCE WITH POSITIVE IMPACT PLAN

Progress or Success Goal 1

Description of Progress or Success: Please see the attached narrative and metrics

Progress or Success Goal 2

Description of Progress or Success: Please see the attached narrative and metrics

COMPLIANCE WITH DIVERSITY PLAN

Diversity Progress or Success 1

Description of Progress or Success: Please see the attached narrative and metrics

HOURS OF OPERATION

Monday From: 10:00 AM	**Monday To:** 8:00 PM
Tuesday From: 10:00 AM	**Tuesday To:** 8:00 PM
Wednesday From: 10:00 AM	**Wednesday To:** 8:00 PM
Thursday From: 10:00 AM	**Thursday To:** 8:00 PM
Friday From: 10:00 AM	**Friday To:** 8:00 PM
Saturday From: 10:00 AM	**Saturday To:** 8:00 PM
Sunday From: 10:00 AM	**Sunday To:** 8:00 PM

Cannabis Control Commission
COMMONWEALTH OF MASSACHUSETTS

Community Outreach Meeting Attestation Form

The applicant must complete each section of this form and initial each page before uploading it to the application. Failure to complete a section will result in the application being deemed incomplete. Instructions to the applicant appear in italics. Please note that submission of information that is "misleading, incorrect, false, or fraudulent" is grounds for denial of an application for a license pursuant to 935 CMR 500.400(1).

I, Tim McNamara, (*insert name*) attest as an authorized representative of Holistic Health Group (*insert name of applicant*) that the applicant has complied with the requirements of 935 CMR 500 and the guidance for licensed applicants on community outreach, as detailed below.

1. The Community Outreach Meeting was held on October 18, 2019 (*insert date*).

2. A copy of a notice of the time, place, and subject matter of the meeting, including the proposed address of the Marijuana Establishment, was published in a newspaper of general circulation in the city or town on October 10, 2019 (*insert date*), which was at least seven calendar days prior to the meeting. A copy of the newspaper notice is attached as Attachment A (*please clearly label the newspaper notice in the upper right hand corner as Attachment A and upload it as part of this document).*

3. A copy of the meeting notice was also filed on October 10, 2019 (*insert date*) with the city or town clerk, the planning board, the contracting authority for the municipality, and local licensing authority for the adult use of marijuana, if applicable. A copy of the municipal notice is attached as Attachment B (*please clearly label the municipal notice in the upper right-hand corner as Attachment B and upload it as part of this document*).

4. Notice of the time, place and subject matter of the meeting, including the proposed address of the Marijuana Establishment, was mailed on October 4, 2019 (*insert date*), which was at least seven calendar days prior to the community outreach meeting to abutters of the proposed address of the Marijuana Establishment, and residents within 300 feet of the property line of the petitioner as they appear on the most recent applicable tax list, notwithstanding that the land of any such owner is located in another city or town. A copy of one of the notices sent to abutters and parties of interest as described in this section is attached as Attachment C (*please clearly label the municipal notice in the upper right hand corner as Attachment C and upload it as part of this document; please only include a copy of one notice and please black out the name and the address of the addressee*).

Initials of Attester: T.M.

Cannabis Control Commission
COMMONWEALTH OF MASSACHUSETTS

5. Information was presented at the community outreach meeting including:
    a. The type(s) of Marijuana Establishment to be located at the proposed address;
    b. Information adequate to demonstrate that the location will be maintained securely;
    c. Steps to be taken by the Marijuana Establishment to prevent diversion to minors;
    d. A plan by the Marijuana Establishment to positively impact the community; and
    e. Information adequate to demonstrate that the location will not constitute a nuisance as defined by law.

6. Community members were permitted to ask questions and receive answers from representatives of the Marijuana Establishment.

Initials of Attester: T.M.

Attachment A

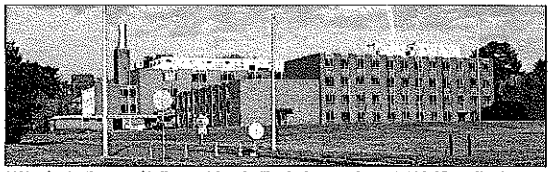

J.J.Manning Auctioneers sold off some of the Lakeville Mixed Use Development LLC holdings off Main Street Aug. 15, and other parts of the former Lakeville Hospital complex are also in the process of being conveyed to new owners, clearing the way for a new growth spurt along Route 105. [PHOTO BY ROBERT BARBOZA/GAZETTE]

OWNERS

From Page A1

added, predicting townspeople are "going to start seeing some construction" in the area in the near future.

Manning would not identify any of the purchasers of the five conveyed parcels, or provide any information on the "entities" trying to complete purchases of the other parcels. On Monday morning, the Lakeville Assessor's Office had no record of any related deed transfer filings being made.

He did hear some of the proposed redevelopment plans, and he expressed some confidence that the town will soon see "a commercial boom to what's been a stagnant area for a few years" if those ideas can quickly come to fruition.

He recalled the 2002 auction in which his firm auctioned off the hospital site for the state Attorney General's Office and surplus land bureau. National Development bought the property, and had big plans for a supermarket and shopping center there that never came to pass. Seventeen years later, a flock of new investors showed up for the August auction, ready to try again.

Now, "The good news for the town of Lakeville is that you have some excited buyers who have some definite ideas about what they're going to do" with their purchases, Manning said.

Local businessman Derek Maksy made the rounds of town boards last year with his plans for redeveloping the eight parcels, but the only development done by his company, Lakeville Mixed Use Development, LLC, was some house lots sold along the Rhode Island Road frontage.

Board of Selectmen Chair John Powderly said Tuesday he had heard rumors around town about some possible purchasers, but had no concrete information to offer residents.

The Gazette will publish the sale data when the information becomes part of the public record.

KENNEL

From Page A1

Brewster, as well as municipal facilities in Middleboro, Auburn, Mansfield, Norton, and Framingham. The animals, once cleared, will be available for adoption.

Parlon indicated it was a mix of anonymous complaints and concerns from people visiting the facility which prompted the search warrant investigation.

Kelly Jarabek, Middleboro animal control officer, said there haven't been any prior complaints about the business. She said Peritti Cane Corso was first issued its kennel license in 2012. She said kennels in town are inspected every year and Peritti Cane Corso "always had positive inspections."

Jarabek indicated the conditions at the kennel deteriorated recently and said the town was not aware until complaints were voiced.

"If you see something, say something," she stressed.

According to its website, Peritti Cane Corso is a small licensed breeder of the Cane Corso owned by Mike Peritti, who lives at the same address as the kennel. Parlon said the 20 or so dogs that were allowed to remain at the property were in a kennel area that had better conditions.

[PHOTO COURTESY OF ANIMAL RESCUE LEAGUE OF BOSTON]

"I'd say he got overwhelmed," Parlon said of the owner.

ARL officials said the investigation is ongoing and did not rule out any possible charges.

SUICIDE

From Page A1

ratios are Connecticut, New York, New Jersey and Maryland. Those with the highest were Montana, Utah, New Mexico, Nevada and Wyoming.

Nationwide, the highest risk in the three-year period from 2014 to 2016 was found in the Wade Hampton (now Kusilvak) Census area in Alaska. It had a 4.2 ratio. The lowest ratio, 0.56, was in Kings County, New York.

Veterans association

Veterans are a population that has high risk of suicide.

A team of psychologists and social workers at VA Boston Healthcare work with veterans who are flagged as having a high risk for suicide.

They reach out, provide support, and develop a treatment plan, said Leslie Wright, who leads the suicide prevention team.

At any given time, between 60 and 75 people are flagged as high risk for suicide within the Boston VA, she said.

Wright reviewed the Ohio State study and said its findings about suicide risk lines up with what the VA has seen.

She emphasized that access to health services can be a factor in suicide risk.

Of the estimated 20 veterans who die by suicide each day, 14 were not connected to VA care, she said. From their research, when a veteran is connected to the VA, their risk of death by suicide does down dramatically.

"Treatment is available and it works," Wright said.

Veterans' experiences in combat and other factors can contribute to whether they might be at risk for suicide, she said. Some are able to adjust well to civilian life, but there are those who struggle.

The team also works with those in need of help who call into the veterans crisis line, which is through the national Suicide Prevention Lifeline.

Between October 2018 and September 20th of this year, the Boston VA has helped 432 people who reached out through the veterans crisis line, Wright said.

The team's efforts tie into the national VA's Be There campaign that focuses on suicide prevention by encouraging people to reach out to the veterans in their lives.

Gun association

The association between gun shops and suicide rates was most substantial in urban areas and present in all county types except the most rural, the study found.

There are at least five firearms stores in the South Shore and South Coast area.

Guns were used in about half of all suicides in 2017, according to the Suicide Prevention Resource Center.

Daniel Ellis, owner of the Brockton Firearms Academy and a gun safety instructor, said suicide prevention isn't part of the curriculum, but he sees it falling under education about proper firearm storage.

"If you're doing what you're supposed to be doing, nobody should get their hands on your gun," he said.

This can apply in various situations, including limiting gun access to people who are thinking about hurting themselves or children in the household, Ellis said.

Researchers found no association between gun shops and suicides by methods other than firearms.

Factors that showed no association with suicide rates were the ratios of physicians to residents and psychiatrists to residents and the number of drinking establishments.

Higher social capital — measured by the number of several groups, such as charities, business, political, civic and religious organizations and opportunities to engage in art and recreation — was associated with reduced suicide rates, the study found.

Researchers hope the findings can be used for specific suicide prevention efforts, said Cynthia Fontanella, co-author and associate professor of psychiatry and behavioral health at Ohio State.

"Findings suggest that increasing social connectedness, civic opportunities, health insurance coverage and limiting access to lethal means within communities have the potential to reduce suicide rates across the rural-urban continuum," the study says.

If you or someone you know has thoughts of suicide, reach the national Suicide Prevention Lifeline at 800-273-8255/TALK (or 888-628-9454 for Spanish speakers.)

PUBLIC NOTICE

The Middleborough Conservation Commission will hold a hearing under M.G.L. c. 131, s.40, the Wetlands Protection Act, to erect a new 4-bedroom single family home with associated amenities, including paved driveway, garage, well and septic system partially within 100' of a bordering vegetated wetland. 265 France Street (Lot 1), Map 75, Lot 4075. Hearing has been requested by Eugene P. Buss Jr. and Kelly A. Buss. Hearing will be held October 17, 2019 at 6:00 PM in the BOS Meeting Room, at the Town Hall, 10 Nickerson Avenue.

Jacqueline Jones, Chair
Diane C. Stewart, 1st Co-Vice Chair
Peter Gately, 2nd Co-Vice Chair
Adam Guerzoni
Nancy Ockers
October 10, 2019
The Middleboro Gazette Newspaper
Notice also on www.masspublicnotices.org

Notice is hereby given that a Community Outreach Meeting for a proposed cultivation/processing/retail adult use Marijuana Establishment is scheduled for Friday, October 18, 2019 at 4:30 PM, at the site location at 477 Wareham Street, South Middleborough 02346. A brief presentation will be given in the construction trailer on the north-western boundary of the site, after which there will be an opportunity for the public to ask questions.

October 10, 2019
The Middleboro Gazette Newspaper
Notice also on www.masspublicnotices.org

The LAKEVILLE ZONING BOARD OF APPEALS, acting in accordance with MASS GENERAL LAWS CHAPTER 40A, as amended, will conduct a public hearing on THURSDAY, October 17, 2019, at 7:00 P.M., in the LAKEVILLE PUBLIC LIBRARY, 4 PRECINCT STREET, upon the petition of Donald Needham. A Special Permit under 6.1 and 7.4 is requested to raze the pre-existing, non-conforming dwelling located on a non-conforming lot, and construct a new dwelling that would be within the side setbacks, as provided by the Lakeville By-Laws. The property site is 6 Plymouth Street.

Donald A. Foster, Chairman
October 3, & October 10, 2019
The Middleboro Gazette Newspaper
Notice also on www.masspublicnotices.org

The LAKEVILLE ZONING BOARD OF APPEALS, acting in accordance with MASS GENERAL LAWS CHAPTER 40A, as amended, will conduct a public hearing on THURSDAY, October 17, 2019, at 7:00 P.M., in the LAKEVILLE PUBLIC LIBRARY, 4 PRECINCT STREET, upon the petition of Kimberly A. Thomas. The applicant is requesting a Special Permit under 6.1.3 and 7.4 to operate a business on a pre-existing, non-conforming lot, located in the business zone but that previously had a residential use, as provided by the Lakeville By-Laws. The property site is 20 Main Street and is owned by Wayne A. Griffith, Gail D. Mason, & Glenn L. Griffith.

Donald A. Foster, Chairman
October 3, & October 10, 2019
The Middleboro Gazette Newspaper
Notice also on www.masspublicnotices.org

Commonwealth of Massachusetts
The Trial Court
Probate and Family Court
Plymouth Probate and Family Court
52 Obery Street, Suite 1130
Plymouth, MA 02360
(508)747-6204
Docket No. PL19P1947EA
CITATION ON PETITION FOR
FORMAL ADJUDICATION
Estate of: Vincent James Napolitano
Also known as: Vincent J. Napolitano
Date of Death: 07/08/2019

To all interested persons: A Petition for Formal Probate of Will with Appointment of Personal Representative has been filed by Laurie Louise Catelli of Southborough, MA requesting that the Court enter a formal Decree and Order and for such other relief as requested in the Petition. The Petitioner requests that: Laurie Louise Catelli of Southborough, MA be appointed as Personal Representative(s) of said estate to serve Without Surety on the bond in an unsupervised administration.

IMPORTANT NOTICE

You have the right to obtain a copy of the Petition from the Petitioner or at the Court. You have a right to object to this proceeding. To do so, you or your attorney must file a written appearance and objection at this Court before: 10:00 a.m. on the return day of 10/25/2019. This is NOT a hearing date, but a deadline by which you must file a written appearance and objection if you object to this proceeding. If you fail to file a timely written appearance and objection followed by an affidavit of objections within thirty (30) days of the return day, action may be taken without further notice to you.

UNSUPERVISED ADMINISTRATION
UNDER THE MASSACHUSETTS
UNIFORM PROBATE CODE (MUPC)

A Personal Representative appointed under the MUPC in an unsupervised administration is not required to file an inventory or annual accounts with the Court. Persons interested in the estate are entitled to notice regarding the administration directly from the Personal Representative and may petition the Court in any matter relating to the estate, including the distribution of assets and expenses of administration.

Witness, Hon. Edward G. Boyle, First Justice of this Court.
Date: September 26, 2019

Matthew J. McDonough
Register of Probate

October 10, 2019
The Middleboro Gazette Newspaper
Notice also on www.masspublicnotices.org

NOTICE OF MORTGAGEE'S SALE OF REAL ESTATE
Premises:
6-7 Keith St,
Middleboro, Massachusetts

By virtue and in execution of the Power of Sale contained in a certain mortgage given by Barbara A. Barry to Financial Freedom Senior Funding Corporation and now held by Bank of New York Mellon Trust Company, N.A., as Trustee for Mortgage Assets Management Series I Trust, said mortgage dated November 16, 2007, and recorded in the Plymouth County Registry of Deeds, in Book 35024 at Page 78, as affected by an Assignment of Mortgage dated September 25, 2009, and recorded with said Deeds in Book 37820 at Page 303, as affected by an Assignment of Mortgage dated February 8, 2016, and recorded with said Deeds in Book 46662 at Page 144, and as affected by an Assignment of Mortgage dated August 15, 2019, and recorded with said Deeds in Book 50322, Page 146, of which mortgage the undersigned is the present holder, for breach of the conditions in said mortgage and for the purpose of foreclosing the same will be sold at Public Auction on October 24, 2019, at 11:00 AM Local Time upon the premises, all and singular the premises described in said mortgage, to wit:

The land with buildings thereon, situated in Middleboro, Plymouth County, Massachusetts, on the Northerly side of Keith Street, bounded and described as follows:

Beginning at a point in the North side of said Keith Street, bearing Westerly and distant 289 feet from the North corner of the premises herein conveyed; thence in line of land formerly owned by Esther A. Phinney, NORTH 2 degrees 30' East about 274 feet to the northeast corner of the premises herein conveyed and formerly owned by A. B. Faunt; thence in line of said Faunt's land, SOUTHEASTERLY about 90 feet to the northeast corner of the lot herein conveyed, the northwest corner of a lot formerly owned by Minnie C. Phinney; thence in line of said lot,

SOUTHERLY about 222 feet to said Keith Street thence in line of said Keith Street, WESTERLY 71 feet to the bound first mentioned.

The above described premises are conveyed together with benefit of and subject to all rights, rights of way, restrictions, easements and reservations, of record if the same are in force and applicable.

Subject to all easements and restrictions of record insofar as any are in full force and effect.

The description of the property contained in the mortgage shall control in the event of a typographical error in this publication.

For Mortgagor's Title see deed dated October 22, 1993, and recorded in Book 12317 at Page 170 with the Plymouth County Registry of Deeds.

TERMS OF SALE: Said premises will be sold and conveyed subject to all liens, encumbrances, unpaid taxes, tax titles, municipal liens and assessments, if any, which take precedence over the said mortgage above described.

TEN THOUSAND ($10,000.00) Dollars of the purchase price must be paid in cash, certified check, bank treasurer's or cashier's check at the time and place of the sale by the purchaser. The balance of the purchase price shall be paid in cash, certified check, bank treasurer's or cashier's check within forty (45) days after the date of sale.

Other terms to be announced at the sale.

Marcisz Law Group, P.C.
275 West Natick Road, Suite 500
Warwick, RI 02886
Attorney for Bank of New York Mellon Trust Company, N.A., as Trustee for Mortgage Assets Management Series I Trust
Present Holder of the Mortgage
Telephone: (401) 234-0200
MLG File No. 17-17820
October 3, 10 & 17, 2019
The Middleboro Gazette Newspaper
Notice also on www.masspublicnotices.org

NOTICE OF MORTGAGEE'S SALE OF REAL ESTATE

By virtue and in execution of the Power of Sale contained in a certain mortgage given by George H. Tower, Debbie J. Tower to Chase Manhattan Bank USA, N.A., dated June 7, 2002 and recorded in the Plymouth County Registry of Deeds in Book 22410, Page 148, as modified by a certain modification agreement dated October 1, 2016, and recorded with said Plymouth County Registry of Deeds in Book 47225, Page 186, of which mortgage the undersigned is the present holder, by assignment from Chase Bank USA, N.A. f/k/a Chase Manhattan Bank, USA, N.A. to Citibank, N.A., as Trustee for Chase Mortgage Funding Loan Asset-Backed Certificates, Series 2002-2, recorded on August 11, 2009, in Book No. 37590, at Page 330

for breach of the conditions of said mortgage and for the purpose of foreclosing, the same will be sold at Public Auction at 12:00 PM on October 23, 2019, on the mortgaged premises located at 43 Pickens Street, Lakeville, Plymouth County, Massachusetts, all and singular the premises described in said mortgage,

TO WIT:

ALL THAT PARCEL OF LAND IN BOROUGH OF LAKEVILLE, PLYMOUTH COUNTY, STATE OF MASSACHUSETTS, AS DESCRIBED IN DEED BOOK 11116, PAGE 249, IDX 31-2-21, BEING KNOWN AND DESIGNATED AS LOT 216, FILED IN PLAT BOOK 33, PAGE 1198.

BY FEE SIMPLE DEED FROM EDWARD W. REYNOLDS AS SET FORTH IN BOOK 11116 PAGE 249 DATED 07/17/1992 AND RECORDED 07/17/1992, PLYMOUTH COUNTY RECORDS, COMMONWEALTH OF MASSACHUSETTS.

For mortgagor(s') title see deed recorded with Plymouth County Registry of Deeds in Book 11116, Page 249.

These premises will be sold and conveyed subject to and with the benefit of all rights, rights of way, restrictions, easements, covenants, liens or claims in the nature of liens, improvements, public assessments, any and all unpaid taxes, tax titles, tax liens, water and sewer liens and any other municipal assessments or liens or existing encumbrances of record which are in force and are applicable, having priority over said mortgage, whether or not reference is made to such restrictions, easements, improvements, liens or claims in the nature of liens, improvements, public assessments, any and all unpaid taxes, tax titles, tax liens, water and sewer liens and any other municipal assessments or liens or existing encumbrances of record which are in force and are applicable, having priority over said mortgage, whether or not reference in

Attachment B

Holistic Health Group
477 Wareham Street
Middleborough, MA 023646
info@holistichealthgroup.org

To all Town Officials:

Notice is hereby given that a Community Outreach Meeting for a proposed cultivation/processing/retail adult use Marijuana Establishment is scheduled for Friday, October 18, 2019 at 4:30 PM, at the site location at 477 Wareham Street, South Middleborough. A brief presentation will be given in the construction trailer on the western boundary of the site, after which there will be an opportunity for the public to ask questions.

If you are unable to make this meeting but still have questions, please feel free to contact us using the information above.

Regards,

The Team at Holistic Health Group

Attachment C

Holistic Health Group
202 Wood Street
Hopkinton, MA 01748
info@holistichealthgroup.org

To [redacted],

You are receiving this communication as an owner of land abutting a proposed Cannabis production and sales establishment:

Notice is hereby given that a Community Outreach Meeting for a proposed cultivation/processing/retail adult use Marijuana Establishment is scheduled for Friday, October 18, 2019 at 4:30 PM, at the site location at 477 Wareham Street, South Middleborough. A brief presentation will be given in the construction trailer on the western boundary of the site, after which there will be an opportunity for the public to ask questions.

If you are unable to make this meeting but still have questions, please feel free to contact us using the information above.

Regards,

The Team at Holistic Health Group

Holistic Health Group, Inc.
477 Wareham st
Middleborough, MA 02344
info@holistichealthgroup.org

Plan to Remain Compliant with Local Zoning

Holistic Health Group (HHG) has negotiated host agreements with the Town of Middleborough to cultivate, manufacture and dispense Cannabis at its location at 477 Wareham Street in the GUX industrial zoning district and Cannabis Business District as approved by the Planning Board and other town entities for these operations.

The company holds a special permit for its operations in the medical market and a host agreement with a 5 year term, and is in the process of applying for its special permit to gain approval for adult use operations, which contain no real deviation from the original special permit except for the market served.

The company also has a building permit for the construction of its facility, comprising some 31,000 square feet that will house all of the company's operations at present for both medical and adult use Cannabis.

HHG does not anticipate any changes to the zoning law(s) of Middleborough, and will otherwise maintain its operations strictly within those guidelines created by said special permits.

Cannabis Control Commission
COMMONWEALTH OF MASSACHUSETTS

Host Community Agreement Certification Form

The applicant and contracting authority for the host community must complete each section of this form before uploading it to the application. Failure to complete a section will result in the application being deemed incomplete. Instructions to the applicant and/or municipality appear in italics. Please note that submission of information that is "misleading, incorrect, false, or fraudulent" is grounds for denial of an application for a license pursuant to 935 CMR 500.400(1).

Applicant

I, Tim McNamara, (*insert name*) certify as an authorized representative of Holistic Health Group (*insert name of applicant*) that the applicant has executed a host community agreement with Town of Middleborough (*insert name of host community*) pursuant to G.L.c. 94G § 3(d) on 9/16/2019 (*insert date*).

Signature of Authorized Representative of Applicant

Host Community

I, Robert C. Nunes, (*insert name*) certify that I am the contracting authority or have been duly authorized by the contracting authority for Town of Middleborough (*insert name of host community*) to certify that the applicant and Town of Middleborough (*insert name of host community*) has executed a host community agreement pursuant to G.L.c. 94G § 3(d) on 9-16-19 (*insert date*).

Signature of Contracting Authority or
Authorized Representative of Host Community

Tim McNamara

From: Tim McNamara
Sent: Thursday, June 3, 2021 12:42 PM
To: Tim McNamara
Subject: RE: Inquiry - Update

From: Colleen Lieb <clieb@middleborough.com>
Sent: Tuesday, April 20, 2021 10:25 AM
To: Denise McGrath <dmcgrath@holistichealthgroup.org>
Subject: FW: Inquiry - Update

Hello There,

I have to correct my previous email, I DO have Holistic Health's filing for a Cannabis License. I need two more signatures on the license, so I will be working on that so I can send it over.

Also, the Town doesn't not have an official answer to that question about the cost, we received a similar inquiry from another business. We are working on a reply for it.

I will keep you posted.
Thank you,
Colleen

Colleen M. Lieb, Executive Assistant
MIDDLEBOROUGH BOARD OF SELECTMEN
10 Nickerson Avenue
Middleborough, MA 02346
Office - (508) 946-2405

From: Colleen Lieb
Sent: Tuesday, April 20, 2021 7:50 AM
To: Denise McGrath <dmcgrath@holistichealthgroup.org>; Robert G. Nunes <rnunes@middleborough.com>
Subject: RE: Inquiry

Good Morning,

I am researching your request this morning and I do not have anything that indicates there is any cost to the Town related to the operation of a cannabis establishment.

However, I am including the Town Manager in this email, so that he can respond and confirm this.

"Municipal Cost Documentation Field and this Field is Required
Please upload documentation demonstrating that the licensee requested from the host community records of any cost to the city or town reasonably related to the operation of the establishment."

I thought you were looking for your Cannabis License when I responded. The Town does not have a Cannabis License for 477 Wareham Street at this point.

Thank you,
Colleen

Colleen M. Lieb, Executive Assistant
MIDDLEBOROUGH BOARD OF SELECTMEN
10 Nickerson Avenue
Middleborough, MA 02346
Office - (508) 946-2405

From: Denise McGrath <dmcgrath@holistichealthgroup.org>
Sent: Tuesday, April 13, 2021 2:42 PM
To: Colleen Lieb <clieb@middleborough.com>
Subject: RE: Inquiry

[**NOTICE:** This message originated outside of the Town of Middleborough mail system -- **PLEASE DO NOT CLICK** on **links** or open **attachments** unless you are sure the content is safe.]

Hi,

If we could pick up before 4/20, that would be ideal.

HOLISTIC HEALTH GROUP
Holistic Health Group, Inc.
Denise McGrath
Office Manager
477 Wareham Street | PO Box 231
Middleborough, MA 02346
774-419-3892 xt 101
774-419-3889 direct line

From: Colleen Lieb <clieb@middleborough.com>
Sent: Tuesday, April 13, 2021 1:04 PM

To: Denise McGrath <dmcgrath@holistichealthgroup.org>
Subject: Re: Inquiry

Hi Denise,
I am out of the office but I do have the document you are looking for.
When do you need it by? I'm back in the office in 4/20.
Please advise,
Thank you,
CL

Sent from my iPhone

On Apr 13, 2021, at 8:10 AM, Denise McGrath <dmcgrath@holistichealthgroup.org> wrote:

[**NOTICE:** This message originated outside of the Town of Middleborough mail system -- **PLEASE DO NOT CLICK** on **links** or open **attachments** unless you are sure the content is safe.]

Good Morning Colleen,

I am just following up with this email. Hoping you could steer me in the right direction.

Thank you!

<image003.png>

Holistic Health Group, Inc.
Denise McGrath
Office Manager
477 Wareham Street | PO Box 231
Middleborough, MA 02346
774-419-3892 xt 101
774-419-3889 direct line

From: Denise McGrath
Sent: Friday, April 9, 2021 11:11 AM
To: clieb@middleborough.com
Subject: Inquiry

Good Morning Colleen,

Could you please assist me with who I should be directing the below inquiry to?

"Municipal Cost Documentation Field and this Field is Required
Please upload documentation demonstrating that the licensee requested from the host community records of any cost to the city or town reasonably related to the operation of the establishment."

Thank you for your assistance with this

<image002.png>

Holistic Health Group, Inc.
Denise McGrath
Office Manager
477 Wareham Street | PO Box 231
Middleborough, MA 02346
774-419-3892 xt 101
774-419-3889 direct line

When responding, please be aware that the Massachusetts Secretary of State has determined that most email is public record and therefore cannot be kept confidential.
When responding, please be aware that the Massachusetts Secretary of State has determined that most email is public record and therefore cannot be kept confidential.

Holistic Health Group, Inc.
477 Wareham st
Middleborough, MA 02344
info@holistichealthgroup.org

Plan for Positive Impact

Holistic Health Group Inc.("HHG") has set a goal of hiring 10% of its employees from communities disproportionately affected by the war on drugs. HHG will focus on the Taunton, and Wareham communities for these hiring goals. To attain viable candidates HHG will use print and digital marketing media which will adhere to the requirements set forth in CCC regulation 935 CMR 500.105(4). Any actions taken, or programs instituted by the applicant will not violate the CCC's regulations with respect to limitations on ownership or control or other applicable state laws.

Goal:

- HHG will set a goal to hire 10% of employees who are Massachusetts residents that have had past drug convictions that reside in communities disproportionately affected by the war on drugs. In particular the towns of Wareham and Taunton.

Program:

- HHG will post monthly advertisements in local newspapers in the Taunton and Wareham communities stating that we are specifically looking to hire Massachusetts residents who have been convicted of a drug offense. All advertisements for employment will specifically state that the jobs are for individuals 21 years of age or older. The job openings will only be marketed to individuals over the age of 21.
- HHG will also host a yearly job fair which will be marketed to these communities along with colleges and workforce development groups within these areas. This job fair will be held in the Middleborough town hall meeting room.

Metric:

- HHG will count the number of individuals hired who have past drug convictions and reside in either Taunton or Wareham. This number will be assessed from the total number of individuals hired to ensure that 10% of all individuals hired fall within this goal. This metric for progress or success will be documented one year from provisional licensure and each year thereafter.

The Commonwealth of Massachusetts

Secretary of the Commonwealth

State House, Boston, Massachusetts 02133

William Francis Galvin
Secretary of the
Commonwealth

October 3, 2019

TO WHOM IT MAY CONCERN:

I hereby certify that according to the records of this office,

HOLISTIC HEALTH GROUP, INC.

is a domestic corporation organized on **July 12, 2018**, under the General Laws of the Commonwealth of Massachusetts.

I further certify that there are no proceedings presently pending under the Massachusetts General Laws Chapter 156D section 14.21 for said corporation's dissolution; that articles of dissolution have not been filed by said corporation; that, said corporation has filed all annual reports, and paid all fees with respect to such reports, and so far as appears of record said corporation has legal existence and is in good standing with this office.

In testimony of which,
I have hereunto affixed the
Great Seal of the Commonwealth
on the date first above written.

William Francis Galvin

Secretary of the Commonwealth

Processed By: sam

Commonwealth of Massachusetts
Department of Revenue
Christopher C. Harding, Commissioner

mass.gov/dor

Letter ID: L1494491008
Notice Date: October 3, 2019
Case ID: 0-000-768-211

CERTIFICATE OF GOOD STANDING AND/OR TAX COMPLIANCE

000018

PAUL OFRIA
HOLISTIC HEALTH GROUP INC
202 WOOD ST
HOPKINTON MA 01748-1014

Why did I receive this notice?

The Commissioner of Revenue certifies that, as of the date of this certificate, HOLISTIC HEALTH GROUP INC is in compliance with its tax obligations under Chapter 62C of the Massachusetts General Laws.

This certificate doesn't certify that the taxpayer is compliant in taxes such as unemployment insurance administered by agencies other than the Department of Revenue, or taxes under any other provisions of law.

This is not a waiver of lien issued under Chapter 62C, section 52 of the Massachusetts General Laws.

What if I have questions?

If you have questions, call us at (617) 887-6400 or toll-free in Massachusetts at (800) 392-6089, Monday through Friday, 8:30 a.m. to 4:30 p.m..

Visit us online!

Visit mass.gov/dor to learn more about Massachusetts tax laws and DOR policies and procedures, including your Taxpayer Bill of Rights, and MassTaxConnect for easy access to your account:

- Review or update your account
- Contact us using e-message
- Sign up for e-billing to save paper
- Make payments or set up autopay

Edward W. Coyle, Jr., Chief
Collections Bureau

Holistic Health Group, Inc.
202 Wood Street
Hopkinton, MA 01748
info@holistichealthgroup.org

HOLISTIC HEALTH GROUP, INC. By-Laws

ARTICLE I
General Provisions

Section 1. *Name* -- The name of the corporation shall be: Holistic Health Group, Inc.

Section 2. *Purpose* – The purpose of the corporation shall be as set forth in the Articles of Organization. In compliance with 105 CMR 725.100(A)(i), the corporation shall at all times operate on a non-profit basis for the benefit of registered qualifying patients, and shall ensure that the revenue of the corporation is used solely in furtherance of its non-profit purpose.

Section 3. *Location* – The principal office of the corporation shall be located at the place set forth in the Articles of Organization of the corporation. The directors may establish other offices and places of business in Massachusetts or elsewhere.

Section 4. *Fiscal Year* -- Except *as* from time to time otherwise determined by the directors, the fiscal year of the corporation shall end on the last day of December of each year.

Section 5. *Members* -- The corporation shall have one class of members which shall be designated as Voting and shall be comprised of the Board of Directors of the Corporation. Any action or vote otherwise required or permitted by Chapter 180 or any other law, rule or regulation to be taken by the members shall be taken by action or vote of the Board of Directors of the corporation.

ARTICLE II
Directors

Section 1. *Powers* -- The business and property of the corporation shall be managed by a board of directors who may exercise all the powers of the corporation.

Section 2. *Election and Numbers* -- The board of directors shall be of such number, no less than three (3) nor more than nine (9), as the directors shall determine from time to time. A majority of the members shall elect the board of directors at the annual meeting of the corporation, or at a special meeting in lieu of an annual meeting. All directors shall hold office until the next annual meeting or special meeting in lieu of an annual meeting or until their respective successors are chosen and qualified.

Section 3. *Resignation and Removal* -- Any director may resign by delivering a written resignation to the corporation at its principal office or to the president or clerk. Such resignation shall be effective upon receipt unless it is specified to be effective at some later time. Any director may be removed from office with or without cause by the affirmative vote of a majority of the voting Directors.

Holistic Health Group, Inc.
202 Wood Street
Hopkinton, MA 01748
info@holistichealthgroup.org

Section 4. *Annual Meeting* -- The annual meeting of the directors of the corporation shall be held on the third Monday of February in each year (or on the next business day if that day is a legal holiday) at such time and place as the directors may determine. If the annual meeting is not held on such date, a special meeting in lieu of an annual meeting may be held with all the force and effect of an annual meeting. Notice of the annual meeting setting forth the date, time, and place of any such meeting shall be mailed to all directors not less than seven (7) days prior to the date of the annual meeting. Notice of any special meeting shall be given as directed under Section 6 of these By-laws.

Section 5. *Regular Meetings* -- Regular meetings of the directors may be held without call or notice at such places and times as the directors may from time to time determine, provided that any director who is absent when such determination is made shall be given notice thereof.

Section 6. *Special Meetings* -- Special meetings of the directors may be held at any time and place designated in a call by the president, the treasurer or two or more directors. Notice of all special meetings of the directors shall be given to each director by the clerk or, in case of the death, absence, incapacity or refusal of the clerk, by the officer or one of the directors calling the meeting. Such notice shall be given to each director in person or by telephone, telegram or facsimile transmission sent to each such director's business or home address at least twenty-four (24) hours in advance of the meeting, or by mail addressed to such business or home address and postmarked at least forty-eight (48) hours in advance of the meeting. Except as required by law, notice of a special meeting need not be given: (i) to any director who, either before or after the meeting, delivers a written waiver of notice, executed by the director, which is filed with the records of the meeting; or (ii) to any director who attends the meeting and who, either prior to the meeting or at its commencement, fails to protest the lack of such notice. A notice or waiver of notice need not specify the purpose of any special meeting unless such purpose is the removal of a director or an officer.

Section 7. *Quorum; Action at Meetings* – A simple majority of the directors then in office shall constitute a quorum but a lesser number may without further notice adjourn the meeting to any other time. At any meeting at which a quorum is present, the vote of a majority of those present shall decide any matter unless the Articles of Organization, these By-laws, or any applicable law requires a different vote.

Section 8. *Action by Consent* -- Any action by the directors or any committee may be taken without a meeting if a written consent thereto is signed by all the directors and filed with the records of the meetings of the directors. Such consent shall be treated for all purposes as a vote at a meeting.

Section 9. *Non-Voting Director* -- The directors may create classes of non-voting directorship such as honorary directors, associate directors, regional directors, friends, alumni and the like, and may elect persons to those classes for such terms and on such conditions as the directors determine and may assign to such persons such responsibilities, duties, and privileges as the directors determine. Persons elected as non-

Holistic Health Group, Inc.
202 Wood Street
Hopkinton, MA 01748
info@holistichealthgroup.org

voting directors shall not be directors for the purposes of these By-laws and shall have no votes at any meetings of the directors.

Section 10. *Committees* -- The directors may elect from their own number an Executive Committee, and may elect such other committees as they may from time to time determine necessary or advisable, including without limitation committees to deal with matters affecting fund raising, planning, development, building and grounds, investments, finances and budgets and other matters affecting the state of the corporation, and may delegate such powers and duties thereto as the board of directors may deem advisable to the extent permitted by law. At any meeting of a committee a quorum for the transaction of all business properly before the meeting shall consist of a majority of the elected members of such committee.

Section 11. Meetings by Remote Communications. Unless otherwise provided in the Articles of Organization, if authorized by the Directors: any annual or special meeting of the Directors need not be held at any place but may instead be held solely by means of remote communication; and subject to such guidelines and procedures as the Board of Directors may adopt, Directors not physically present at a meeting may, by means of remote communications: (a) participate in a meeting of Directors; and (b) be deemed present in person and vote at a meeting of Directors whether such meeting is to be held at a designated place or solely by means of remote communication, provided that: (1) the Corporation shall implement reasonable measures to verify that each person deemed present and permitted to vote at the meeting by means of remote communication is a Director; (2) the Corporation shall implement reasonable measures to provide such Directors a reasonable opportunity to participate in the meeting and to vote on matters submitted to the Directors, including an opportunity to read or hear the proceedings of the meeting substantially concurrently with such proceedings; and (3) if any Director votes or takes other action at the meeting by means of remote communication, a record of such vote or other action shall be maintained by the Corporation.

ARTICLE III
Officers

Section 1. *Officers* -- The officers of the corporation shall consist of a president, vice president, treasurer, clerk, and such other officers as the directors may determine.

Section 2. *Election* -- The president, vice president, treasurer and clerk shall be elected annually by the directors. Any other officers determined necessary or desirable by the directors may be elected by the directors. Any two or more offices may be held by the same person. The clerk shall be a resident of the Commonwealth of Massachusetts unless the corporation shall appoint a resident agent for the service of process appointed in the manner prescribed by law. Except as otherwise provided by law, the Articles of Organization or these By-laws, all officers shall hold office until the annual meeting of the directors, or until their respective successors are chosen and qualified.

Holistic Health Group, Inc.
202 Wood Street
Hopkinton, MA 01748
info@holistichealthgroup.org

Section 3. *Resignation and Removal* -- Any officer may resign by delivering a written resignation to the corporation at its principal office or to the president or clerk, and such resignation shall be effective upon receipt unless it is specified to be effective at some later time. The directors may remove any officer with or without cause by a vote of a majority of the directors then in office.

Section 4. *President* -- The president shall be the chief executive officer of the corporation and as such shall have charge of the affairs of the corporation subject to the supervision of the board of directors. The president shall, subject to the direction and control of the board of directors, preside when present at all meeting of the directors. The president shall have such other powers and duties as are usually incident to that office and as may be vested in that office by the directors.

Section 5. *Treasurer* -- The treasurer shall, subject to the direction and control of the board of directors, have general charge of the financial affairs of the corporation and shall keep full and accurate books of account. The treasurer shall maintain custody of all funds, securities and valuable documents of the corporation, except as the directors may otherwise provide. The treasurer shall have such other powers and duties as are usually incident to that office and as may be vested in that office by these By-laws or by the directors.

Section 6. *Clerk* -- The clerk shall give such notices of meetings of directors as are required by these By-laws and shall keep as record of all the meetings of directors. The clerk shall have such other powers and duties as are usually incident to that office and as may be vested in that office by these By-laws or by the directors. In the absence of the clerk from any meeting of directors, a temporary clerk designated by the person presiding at the meeting shall perform the duties of the clerk.

ARTICLE IV
Indemnification of Directors and Officers

The corporation shall, to the extent legally permissible, indemnify each person who may serve or who has served at any time as a director, president, vice president, treasurer, assistant treasurer, clerk, assistant clerk or other officer of the corporation or who at the request of the corporation may serve or at any time has served as a fiduciary or trustee of an employee benefit plan of the corporation (collectively, "Indemnified Officers" or individually, "Indemnified *Officer"),* against all expenses and liabilities, including, without limitation, counsel fees, judgments, fines, excise taxes, penalties and settlement payments, reasonably incurred by or imposed upon such person in connection with any threatened, pending or completed action, suit or proceeding whether civil, criminal, administrative or investigative (a "proceeding") in which an Indemnified Officer may become involved by reason of serving or having served in such capacity (other than a proceeding voluntarily initiated by such person unless a majority of the full board of directors authorized the proceeding); provided that no indemnification shall be provided for any such Indemnified Officer with respect to any matter as to which the Indemnified Officer shall have been finally adjudicated in any proceeding not to have acted in good faith in the reasonable belief that

Holistic Health Group, Inc.
202 Wood Street
Hopkinton, MA 01748
info@holistichealthgroup.org

such Indemnified Officer's action was in the best interests of the corporation or, to the extent that such matter relates to service with respect to an employee benefit plan, in the best interests of the participants or beneficiaries of such employee benefit plan; and further provided that any compromise or settlement payment shall be approved by the corporation in the same manner as provided below for the authorization of indemnification.

Such indemnification may, to the extent authorized by the board of directors of the corporation, include payment by the corporation of expenses incurred in defending a civil or criminal action or proceeding in advance of the final disposition of such action or proceeding, upon receipt of an undertaking by the Indemnified Officer to repay such payment if not entitled to indemnification under this article, which undertaking may be accepted without regard to the financial ability of such Indemnified Officer to make repayment.

The payment of any indemnification or advance shall be conclusively deemed authorized by the corporation under this article, and each director and officer of the corporation approving such payment shall be wholly protected, if:

(i) the payment has been approved or ratified (1) by a majority vote of the directors who are not at that time parties to the proceeding or (2) by a majority vote of a committee of two or more directors who are not at that time parties to the proceeding and are selected for this purpose by the full board (in which selection directors who are parties may participate); or

(ii) the action is taken in reliance upon the opinion of independent legal counsel (who may be counsel to the Corporation) appointed for the purpose by vote of the directors in the manner specified in clauses (1) or (2) of subparagraph (i) or, if that manner is not possible, appointed by a majority of the full board of directors then in office; or

(iii) the directors have otherwise acted in accordance with the standard of conduct applied to directors under Chapter 180 of the Massachusetts General Laws, as amended; or

(iv) a court having jurisdiction shall have approved the payment.

The indemnification provided hereunder shall inure to the benefit of the heirs, executors and administrators of any Indemnified Officer entitled to indemnification hereunder.

The right of indemnification under this article shall be in addition to and not exclusive of all other rights to which any person may be entitled. Nothing contained in this article shall affect any rights to indemnification to which corporation employees, agents, directors, officers and other persons may be entitled by contract or otherwise under law.

This article, as amended, constitutes a contract between the corporation and the Indemnified Officers. No amendment or repeal of the provisions of this article which adversely affects the right of an Indemnified Officer under this article shall apply to that Indemnified Officer with respect to the acts or omissions of such Indemnified Officer that occurred at any time prior to such amendment or repeal, unless such amendment or repeal was voted for by or was made with the written consent of such Indemnified Officer.

ARTICLE V
Miscellaneous Provisions

Holistic Health Group, Inc.
202 Wood Street
Hopkinton, MA 01748
info@holistichealthgroup.org

Section 1. *Execution of Instruments* -- All contracts, deeds, leases, bonds, notes, checks and other instruments authorized to be executed by an officer of the corporation on its behalf shall be signed by the president or the treasurer except as the directors may generally or in particular cases otherwise determine.

Section 2. *Voting of Securities* -- Except *as* the board of directors may otherwise designate, the president or treasurer may waive notice of, and appoint any person or persons (with or without power of substitution) to act as proxy or attorney in fact for this corporation at any meeting of stockholders of any other corporation, the securities of which may be held by this corporation.

Section 3. *Corporate Records* -- The original or attested copies of the Articles of Organization, By-laws and records of all meetings of incorporators and directors shall be kept in Massachusetts at the principal office of the corporation or of the clerk, but such corporate records need not all be kept in the same office.

Section 4. *Definitions* -- All references in these By-laws to the Articles of Organization and to these By-laws shall be deemed to refer, respectively, to the Articles of Organization and the By-laws of the corporation as amended and in effect from time to time.

ARTICLE VI
Amendment of By-laws

Section 1. *Amendment* -- These By-laws may at any time be amended or repealed, in whole or in part, by vote of a majority of the voting Directors.

Presented and Accepted:

_____
Paul Ofria

_____
Tim McNamara

_____
Colonel Boothe

_____
Ken Ofria

The Commonwealth of Massachusetts
William Francis Galvin

No Fee

Secretary of the Commonwealth, Corporations Division
One Ashburton Place, 17th floor
Boston, MA 02108-1512
Telephone: (617) 727-9640

Statement of Change of Supplemental Information
(General Laws, Chapter 156D, Section 2.02 AND Section 8.45; 950 CMR 113.17)

1. Exact name of the corporation: HOLISTIC HEALTH GROUP, INC.

2. Current registered office address:
Name: MCNAMARA & YATES, P.C.
No. and Street: 128 RTE, 6A
City or Town: SANDWICH State: MA Zip: 02563 Country: USA

3. The following supplemental information has changed:

__ *Names and street addresses of the directors, president, treasurer, secretary*

Title	Individual Name First, Middle, Last, Suffix	Address (no PO Box) Address, City or Town, State, Zip Code
PRESIDENT	PAUL OFRIA	202 WOOD ST. HOPKINTON, MA 01748 USA
TREASURER	COLONEL BOOTHE	202 WOOD ST. HOPKINTON, MA 01748 USA
SECRETARY	TIM MCNAMARA	202 WOOD ST. HOPKINTON, MA 01748 USA
DIRECTOR	PAUL OFRIA	202 WOOD ST. HOPKINTON, MA 01748 USA
DIRECTOR	COLONEL BOOTHE	202 WOOD ST. HOPKINTON, MA 01748 USA
DIRECTOR	TIM MCNAMARA	202 WOOD ST. HOPKINTON, MA 01748 USA
DIRECTOR	KEN OFRIA	202 WOOD ST. HOPKINTON, MA 01748 USA

__ **Fiscal year end:**
December

__ **Type of business in which the corporation intends to engage:**

CULTIVATION, DISTRIBUTION AND SALE OF CANNABIS.

__ **Principal office address:**

No. and Street: 202 WOOD ST.
City or Town: HOPKINTON State: MA Zip: 01748 Country: USA

__ **g. Street address where the records of the corporation required to be kept in the Commonwealth are located *(post office boxes are not acceptable)*:**

No. and Street: 202 WOOD ST.

City or Town: HOPKINTON State: MA Zip: 01748 Country: USA

which is

X its principal office

__ an office of its transfer agent

__ an office of its secretary/assistant secretary

__ its registered office

Signed by PAUL OFRIA , its PRESIDENT
on this 14 Day of February, 2019

© 2001 - 2019 Commonwealth of Massachusetts
All Rights Reserved

THE COMMONWEALTH OF MASSACHUSETTS

I hereby certify that, upon examination of this document, duly submitted to me, it appears that the provisions of the General Laws relative to corporations have been complied with, and I hereby approve said articles; and the filing fee having been paid, said articles are deemed to have been filed with me on:

February 14, 2019 10:55 AM

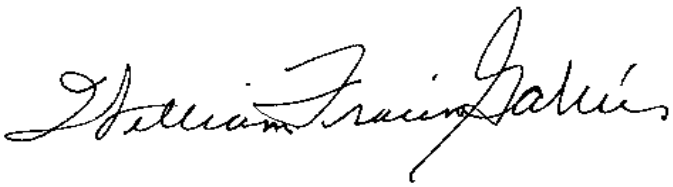

WILLIAM FRANCIS GALVIN

Secretary of the Commonwealth

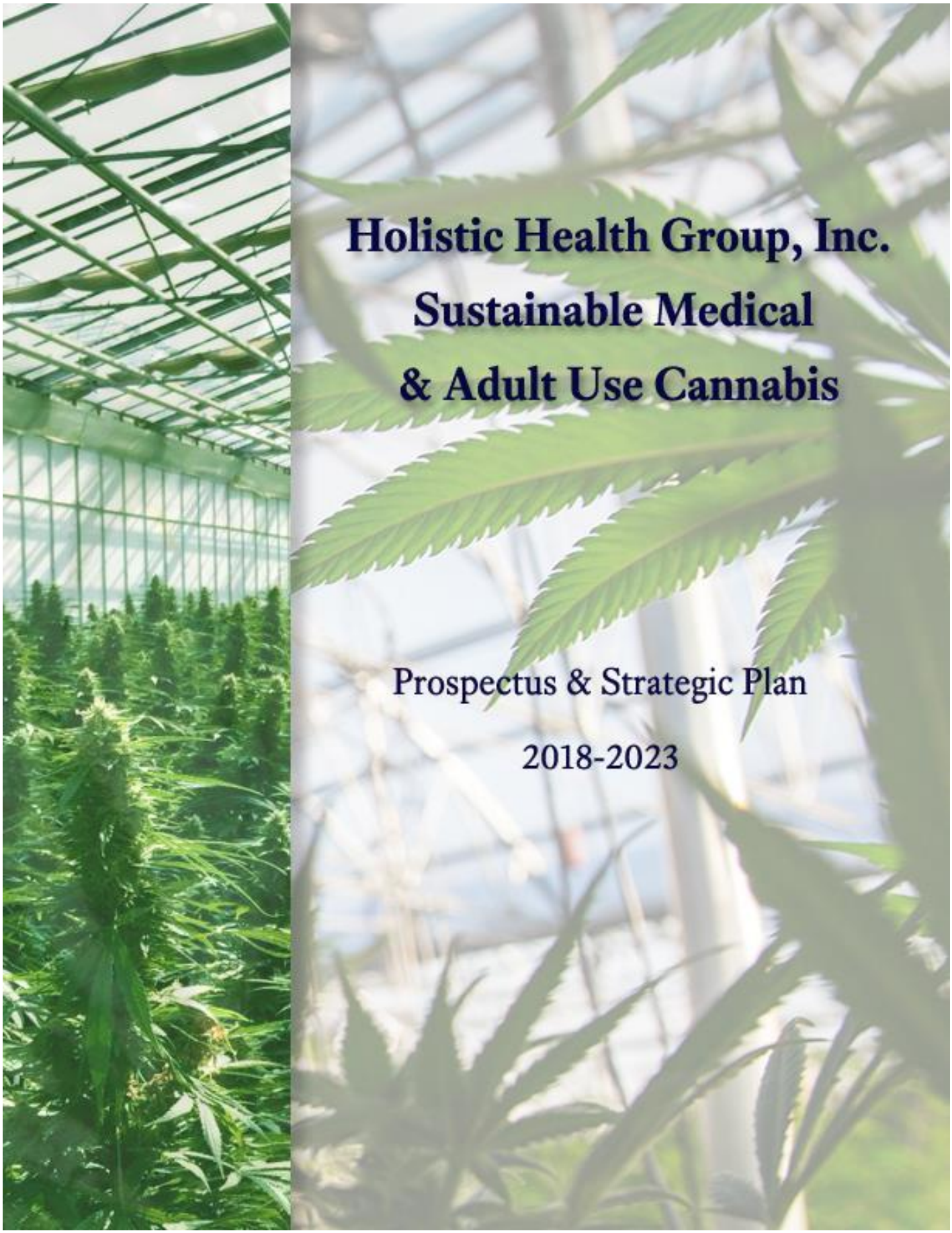

Holistic Health Group, Inc.
Sustainable Medical & Adult Use Cannabis

Prospectus & Strategic Plan

2018-2023

HHG Corporate Summary

HHG is a Massachusetts corporation formed in 2016 to cultivate, process and dispense Cannabis to qualifying patients in the Commonwealth as a Registered Marijuana Dispensary (RMD), and for the adult use market. The corporation is in the midst of its licensing process with the Cannabis Control Commission (CCC), with final licensure on its outdoor grow and other licenses (cultivation, manufacturing & retail in the pipeline as the facility proceeds to final occupancy. Having obtained all town approvals to carry out its in Middleborough, the company presently employs about 10 full time staff with 5 more hires expected within the next 3-4 months.

Holistic Health Group is committed to continue its leadership in sustainable cultivation and production practices among most if not all other operators in the northeastern United States using all available technologies. On a long term basis, and as operations commence, the company plans to focus its product development on the medicinal and palliative applications of Cannabis by phenological, genealogical and other means, a goal it believes will benefit the entire market.

HHG Formula For Success – A Unique Combination of Industry Strengths

Efficiency: Holistic Health Group has been focused on planning over speed for its entry into the Cannabis market. The HHG One facility in Middleborough was planned from the ground up with a primary focus of cultivation efficiency and work flow, and a secondary focus of building an efficient, meaningful and pleasant working experience for its employees. The closely held organization has a single investor source so that these goals are not at odds with divergent influences that other companies face.

Sustainability: Massachusetts regulations restrict maximum lighting power density (LPD) between thresholds ranging of 36 and 50, due to State concerns about the significant power usage use in indoor cultivation. HHG aims to surpass 95% of other MA licensees in reducing LPD. Hybrid greenhouse design is the hallmark of Holistic Health Group's operations. While nearly all other operators in Massachusetts have opted for existing indoor warehouses and/or new steel buildings, HHG has committed to modern agricultural technologies for its cultivation ranging from LED lighting for its early, mother & supplemental greenhouse lighting. In addition the company's site is improved with just short of an acre of outdoor Cannabis cultivation area.

Equity: Massachusetts regulations express a preference that Cannabis licenses be granted to entities majority owned by in-state residents -- or under economic empowerment by certain races, as well as those with Cannabis related drug offenses in the past. All owners and investors of the company have resided in Massachusetts for their entire lives, and President Tim McNamara experienced a Cannabis offense in his past, meaning the group has a personal commitment to resolving the impact of the war on drugs in Massachusetts. As part of its commitment for positive impact to the community, HHG conducts hiring activities in communities designated by the Commission for that purpose, and McNamara uses his legal background to give seminars on criminal record expungement and sealing.

Scale & Scalability: Other state markets have revealed that prices by weight may fall by as much as 300% in a three year period, so that apart from operational cost controls, volume will be increasingly important towards profitability in the maturing Cannabis market. HHG's greenhouse building includes some 14,000 sq. ft. of cultivation space, and an additional 14k sq. ft. of outdoor space, and room to spare to expand either of these areas.

Research & Development: Like all RMD applicants, the company will serve an important purpose in providing the best and latest treatments to their patients – in addition to sustainable quality products for consumers. HHG's officers were attendees at the annual CannMed conference held at Harvard Medical School, and the group is engaged in building targeted operations for institutional caregivers permitted by Massachusetts regulations that it believes will enhance the medical market, and provide a useful tool for researchers in internal medicine.

Seed-to-Sale Operation Specifics

Cultivation-Specific Operations: The cultivation facility will run approximately 15 hours per day, seven days a week and will employ two shifts of employees for a total staff of approximately 24 employees. One of the few hybrid greenhouse operations in the State of Massachusetts, HHG believes it will surpass nearly all other Cannabis cultivation facilities in the region in terms of energy efficiency and carbon emission reduction. This is particularly relevant where Massachusetts is the first state to employ limitations on power consumption.

The greenhouse design incorporates state of the art light deprivation curtain systems for flowering periods, and also includes thermal curtains for added insulation during the colder New England months. As the facility expands to meet further expected product demand in the State, the company will continue to integrate newer systems of automation for workflow functions such as fertigation and harvesting activities.

HHG has built custom drying and curing rooms with food grade dehumidification and climate control systems perfected in other industries, to ensure breadth and depth in Cannabinoid preservation. Believing these post-harvest functions to be one of the most critical periods in the preparation of high quality Cannabis, the company paid special attention to this design specifically for testing precision adjustments of water content and temperature over varying lengths of time.

Extraction-Specific Operations: Like the drying and curing processes, extraction is an equally critical aspect of HHG's operations with respect to Cannabis derivative products. The company has plans for solventless extraction and later ethanol extraction, consistent with the relatively stringent testing thresholds for petrochemical impurities under Massachusetts medical marijuana regulations. In time the company may adopt extraction methods using other methods and solvents, based on demand in the medical and adult use markets.

Manufacture-Specific Operations:

The company is building a commercial grade kitchen for the manufacture of chewables and other edible products that incorporate Cannabis extracts. Product development will ultimately be driven by consumer demand and market research, but HHG's intent is to create single serve and low-dosage, (e.g. 5mg THC) multi-serving packaged goods. Anecdotal and empirical studies conducted in other recently regulated jurisdictions indicate that consumers are often given Cannabis without a proper understanding of dosage, and experience negative effects as a result.

The packaging will meet all Massachusetts regulations regarding consumer disclosure, but the group is focused on making dosage information as clear as possible for its patients, clients and its host community at large to ensure the least possibility of overdosing from THC.

Sales-Specific Operations:

Products: HHG will be selling a wide variety of Cannabis plant material and concentrate, along with a selection of Cannabis derivative and infused products such as edibles, topicals, tinctures and beverages. The company will have a line of similar CBD-heavy products as well. While the products in both medical and adult use markets will be similar, medicinal products will often include higher dosages of THC as permitted under Massachusetts regulations. Specific products will be reflected in a weekly updated menu for patient and customer information.

Customer Service: HHG will be conducting regular trainings for staff on customer and patient service as part of its obligations under State licensing regulations, as well as its commitment to the overall sales experience. These trainings will cover a range of related factors including but not limited to dress code, professionalism & etiquette, security protocols, product handling and disposal, Cannabis product dosage guidelines & general Cannabis education. HHG has engaged "Sinsemilla Seminars" for its responsible vendor training required by State regulations.

Competitor Differentiation: The management of HHG believes its focus on employee education and patient/client communication distinguishes the company from others in the industry. Every member of the HHG workforce will have an opportunity to participate in the company's "WorkShare" program to encourage an employee in one department to participate in the activities of another department as needed, thereby educating e.g. dispensary agents in cultivation or extraction practices.

HHG Plant-touching Careers Diagram

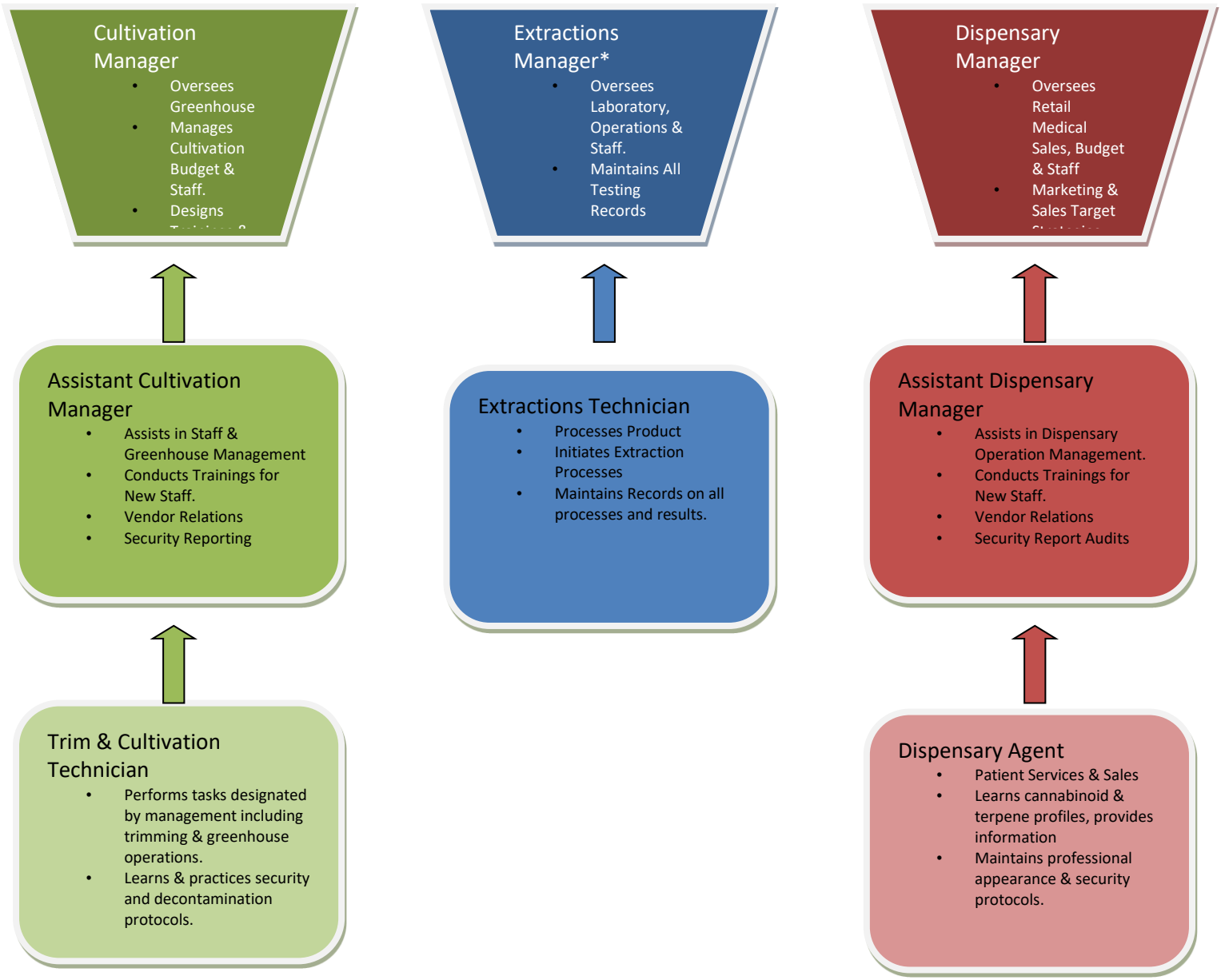

With respect to patients and clients, the company additionally believes that anyone visiting an HHG dispensary should have immediate access to product information during any waiting periods. A number of vendors provide electronic and print services that HHG will use for this purpose. In addition the company will use modern communications technologies to institute a robust customer feedback program to ascertain where improvements may be made.

Continued emphasis on these aspects of the customer experience will position HHG as a strong competitor in this industry.

Massachusetts Cannabis Market at a Glance

HHG's plans have centered on the assumption that approximately 3% of the Massachusetts population may be considered a patient with a medical marijuana recommendation. That said, the market differs within each locale HHG will operate in, though some general statistics were highlighted in a DPH survey to shed light on state-wide trends.

- 21% of respondents consumed Cannabis in the past 30 days (26% of men; 17 percent of women).
- Recent data shows that adult use basket size is roughly $41.00.
- Smoking remains the most popular delivery method, but close to 50% use various methods.
- The agency's medical market snapshots do not exist, but the population is still increasing marginally.

The company has operations or plans to operate in the following locales:

Middleborough: HHG's hub of operations will be in Middleborough which is home to approximately 25,000 people. The facility is just off I495 Exit 8 which sees nearly 40k cars per day (20k in each direction), and significant increases during the summer months for traffic to Cape Cod. While another dispensary is expected to open between HHG and this highway, HHG's parking lot will hold up to 60 customers compared to roughly 6 at the competitor's location. If HHG uses I495 instead of the town population as a baseline, the company at 21% of one direction of traffic shared equally by two licensees could expect to serve up to 2100.

While this would ordinarily require a high volume of customers moving through an approximate 1000 square foot sales floor, the company's plans for online ordering, express pickup and self-service kiosks should aid in mitigation of customer traffic. For further context another nearby dispensary in neighboring Wareham reported seeing roughly 1100-1800 customers per day, or 1.3M to $2.2M per month.

Other Market Factors

HHG is the only group to its knowledge that is actively seeking to work within the Institutional Caregiver framework under amended DPH regulations for sales to nursing homes, hospice clinics and the like. The company believes this market segment will be enhanced as federal and state laws catch up with the medicinal value of Cannabis for a variety of age-related illness and disease ranging from Alzheimer's to Arthritis. Inquiries for more information on this program, named Silverleaf, should be directed to the management team.

Risks and Opportunities

Despite a sea change in sentiment in both the state and federal government regarding acceptance of both medical and adult use marijuana, federal prohibition of the substance and its Schedule I status persists. The group sees this naturally as the biggest risk to its operations until a change in legislation occurs. In the meantime, access to banking, investment, insurance and the U.S. consumer market will be limited to HHG as with all Cannabis businesses.

At the same time, the interplay between state and federal prohibition present an opportunity for HHG to stake out key geographical and market territory in the cities and towns where it operates. Whether or not federal legalization occurs, state and local zoning of cultivation, processing and retail sales of marijuana are likely to remain consistent for many years thereafter. New England is comprised of many well-established communities where land and space for development is a fixed resource, so it is unlikely that any major zoning changes will occur within them.

Still, many towns throughout Massachusetts are continuing to evolve their regulations as Cannabis enjoys wider adoption and less fear from the general population. Some of these towns have severely limited, effectively prohibited, or outright banned the operation of adult use Cannabis businesses within their borders, and this trend will abate to some extent if past experience can be relied upon as a predictor. This will in turn modify the competitive landscape for some Cannabis business operators located near such towns.

Supply gluts too can be considered a moderate risk factor for Massachusetts Cannabis businesses. The State's zoning and licensing laws are sufficiently complex to prevent too much cultivation from coming online at the same time in the way that was recently reported in Washington and Oregon. But there is a real threat that the New England trend of legalization on the one hand, and black or gray market activities on the other, is causing downward pressure on wholesale pricing of Cannabis. HHG's vertically integrated model will aid to balance this threat, as it will be able to maintain complete market control from production through sales.

Management Team

Paul Ofria - Paul was born and raised in Dorchester and greater Boston, started early working in technical sales, then later started and ran an electronic billing software company, as well as entering the wireless communications market during the telecom boom.

Tim McNamara – From the Cape, Tim is an attorney and entrepreneur and drives a truck with a dog who sits in the back.

Financial Projections

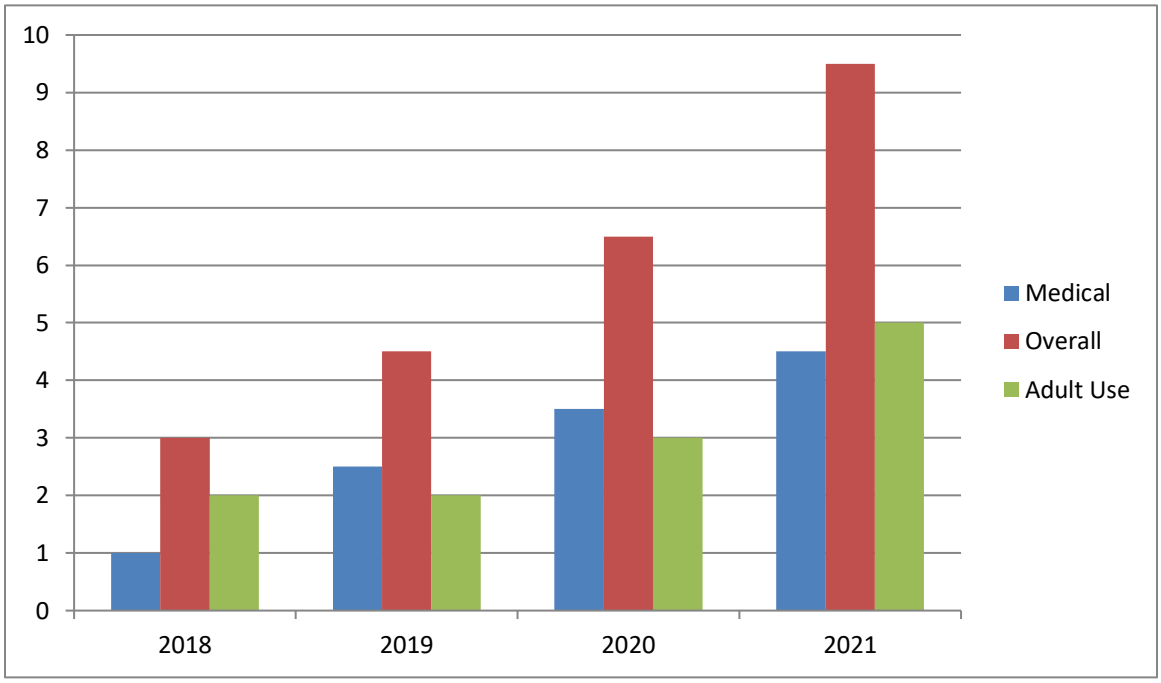

Holistic Health Group, Inc.
477 Wareham st
Middleborough, MA 02346
info@holistichealthgroup.org

Plan to Obtain Insurance

HHG has obtained the following coverage for insurance:

- General liability of $1,000,000 per occurrence and $2,000,000 in the aggregate, annually with a deductible not to exceed $5,000 per occurrence.
- Product liability for $1,000,000 per occurrence and $2,000,000 in the aggregate, annually with a deductible not to exceed $5,000 per occurrence.
- Workers Compensation insurance is in place for all employees at HHG.
- Healthcare Insurance, including vision and dental, is available to all employees at HHG.

Holistic Health Group, Inc.
477 Wareham st
Middleborough, MA 02344
info@holistichealthgroup.org

Diversity Plan

Holistic Health Group Inc. ("HHG") operates a medical and recreational Cannabis cultivation, manufacturing and sales facility in its host community of Middleborough, a town comprised of approximately 96.1% white individuals. The three next most populous races are African Americans at 1.3%, Native Americans at .3%, and Asians at .4%. And while HHG's HCA mandates a preference for hiring within this Town, Holistic Health Group has set a goal to employ as many qualified minority candidates as possible, in addition to veterans and those with disabilities, and women, to ensure these groups are not excluded from those able to participate in this new industry. The company will do so by conducting various outreach, career preparation and hiring activities in the nearby community of Taunton to the west, the adjacent town of Wareham to its south, and the City of Worcester. To attain viable candidates HHG will employ all available outreach efforts which adhere to the requirements set forth in CCC regulation 935 CMR 500.105(4).

Goal:

HHG has set a goal to hire at a minimum 25% of employees who are minorities. The company further pledges to ensure its field of hiring candidates is as diverse as possible under CCC regulations by conducting activities aimed at outreach, career development and hiring in the town of Wareham, and the city of Taunton.

Program:

- HHG will host, at a minimum, two events per year targeting the identified areas of disproportionate impact, for the purposes of workforce outreach, career development and hiring. An online component via Zoom or similar application will be incorporated to account for any restrictions on public gatherings.
- Publicity will include targeted postings on social media, physical flyers and other means deemed viable, all in compliance with marketing regulations at 935 CMR 500.105(4).
- Said outreach efforts will explicitly include the company's goal to encourage those who lived in a community disproportionately by the war on drugs.
- HHG will identify community organizations to partner with who work with these targeted groups and post all job postings with these organizations.

Metric:

- HHG will annually provide a timeline narrative of its hiring activities and statistics over the trailing 12 months. This Narrative will include the following information by quarter:

Holistic Health Group, Inc.
477 Wareham st
Middleborough, MA 02344
info@holistichealthgroup.org

- Approximate number of employees working during this period, and of this number:
  - Number of employees who identified as a minority.
  - Number of employees who were veterans.
  - Number of employees who claimed a disability.
  - Number of employees who identified as female.
  - Number of employees who identified their sexual orientation or as a member of the LGBT+ community.
- Summaries of hiring & outreach events held complete with publicity efforts, marketing materials and attendance statistics broken down as above.
- Total number of applicants vs. total number of applicants declaring or representing themselves belonging to the above criteria.

- HHG will report annually on challenges, obstacles or any other issues it identifies that impede the company's stated goals.

Holistic Health Group, Inc.
477 Wareham st
Middleborough, MA 02344
info@holistichealthgroup.org

Personnel policies including background checks

The HHG Staffing and Training Plan details the processes the Human Resource Manager will use to manage human resources in order to provide the highest quality service and education to patients while acting in compliance with CCC regulations. The Human Resource Manager is assigned responsibility for maintaining and updating the Plan, which will ensure that HHG has sufficient staff possessing the correct skill-sets and experience needed to ensure the success of all operations.

HHG encourages personal growth, development and empowerment for its employees. All employees are encouraged to provide input and suggest new policies and processes.

CONFIDENTIAL DATA STORAGE

Employee data will be stored in Microsoft Azure via Office 365's SharePoint document management system. Data stored within the Microsoft cloud is secured with HIPPA compliant security protocols.

All employee data will be entered directly into Office 365 through an internet browser using Secure Socket Layer ("SSL") connections. All SSL connections are established using 2048-bit keys.

Once data has reached Office 365 it will be encrypted with BitLocker which uses Advanced Encryption Standard with 256-bit keys.

FAIR EMPLOYMENT PRACTICES POLICY

HHG is committed to providing all employees with a safe, healthy and economically beneficial working environment. Workplace safety and environmental standards are of utmost concern to HHG, as the welfare of our employees greatly impacts our ability to operate successfully.

Fair employment practices, including the prohibition against all forms of illegal discrimination, will be prioritized and enforced at all times through HHG codes of conduct. All HHG employees will receive access to generous benefits packages and rates of compensation that exceed state minimum standards. By providing equal access and fair treatment to all employees we will improve HHG success while enhancing the progress of individuals and the community in which our business operates.

COMPENSATION STANDARDS AND TIME OFF

Holistic Health Group, Inc.
477 Wareham st
Middleborough, MA 02344
info@holistichealthgroup.org

The standard HHG workweek is 40 hours of work. Overtime compensation is paid to non-exempt employees in accordance with federal and state wage and hour restrictions. Overtime is payable for all hours worked over 40 per week at a rate of one and one-half times the non-exempt employee's regular hourly rate.

Each employee's hourly wage or annual salary will be reviewed at least once each year. Increases will be determined by the ability of the HHG to financially support them on the basis of performance, adherence to laws, HHG policies and procedures and the ability of employees to meet or exceed duties per job description and achieve performance goals.

HHG will provide all employees with competitive wages based upon position and tenure. Standard HHG wages range from $15/hour to $125k annually. By providing our employees with adequate compensation, we reinforce our commitment to investing in the progress of individuals and the establishment of a highly capable and experienced team. It is a goal of HHG to establish long-term employment opportunities for all employees.

HHG will offer its regular full-time employees paid vacation, the amount of time earned each year will be based on the employee's position and tenure.

Additionally, HHG will provide unpaid leave opportunities for all employees to care for the employee's child after birth or placement for adoption or foster care, to care for the employee's spouse, son, daughter or parent, who has a serious health condition, for a serious health condition that makes the employee unable to perform the employee's job and for a qualifying exigency or military caregiver leave, as described below

BENEFITS

HHG is committed to providing a generous employee benefit program for all employees and agents. All HHG employees will have the opportunity to participate in a 401(k) plans and other types of retirement programs with a HHG funds match. Employees will also be presented with access to competitive health insurance programs and/or a health savings account (HSA) program for their entire family. 125 Flexible Spending Accounts will be established for participating employees, allowing participants to set aside pre-tax dollars to pay for certain types of expenses. HHG will establish access to three plans: (1) for medical expenses, (2) for dependent care expenses and (3) for certain commuting expenses. HHG will additionally provide employees with options for participating in long-term and short- term dental and vision coverage, disability insurance and life insurance programs.

Holistic Health Group, Inc.
477 Wareham st
Middleborough, MA 02344
info@holistichealthgroup.org

The HHG Community Involvement Rewards program will provide employees with the ability to earn benefits-related credit through involvement in community-based initiatives such as volunteer work, participation in local mentorship programs and additional community service programs.

Additionally, when operations commence HHG plans to offer retirement and tuition reimbursement plans that benefit employee progression in the HHG..

Bonuses are variable, vary based on department, and generally not exceeding 5% of an individual's total yearly salary but could exceed that if dispensary sales can support it. Additionally, all bonuses are at management's discretion .

POTENTIAL EMPLOYEE SCREENING AND MONITORING

It is critical for the security of HHG that only the most qualified, credible, talented and culturally diverse people are hired to help avoid workplace theft, fraud or violence.

It's equally important for the HHG to conduct background screening on the contingent workers, including cleaning crews, facilities maintenance workers, auditors and other contractors who have access to the HHG's property or represent the HHG. Knowing the background of these workers is required to protect the integrity of the HHG, as well as the safety of customers. Therefore, this workforce needs to be screened with the same due diligence as any other employee.

To help attract, hire, land and retain the best employees the HHG has developed employment screening and monitoring processes to create a candidate experience that benefits potential employees and reduce HHG risk by utilizing a fast, scalable and compliant background screening solution. An efficient, thorough employment screening process can, above all else, help reduce the HHG's overall workplace risk. Identifying risk early, prior to hiring an employee, protects the organization from risk related to physical safety, financial security organizational image or reputation and legal compliance.

COMPLIANCE

The Human Resources Manager will ensure compliance with local, state and federal laws regarding the hiring and employment screening processes. The most prominent legislation that HHG must abide by is the Fair Credit Reporting Act ("FCRA").

PRE-SCREENING POTENTIAL CANDIDATES

Holistic Health Group, Inc.
477 Wareham st
Middleborough, MA 02344
info@holistichealthgroup.org

The Human Resources Manager will pre-screen candidates by stating clearly to potential applicants what items and prerequisites will be needed to properly qualify the employment application. This will streamline HHG's application process by having applicants review the information and then determine whether or not they meet the qualifications. This is part of the proactive pre-screening process that ensures applicants who submit their information will pre-qualify based on the specific information needed later in the process.

HHG will integrate instant and automated employment screening products into the hiring process. Instant searches will be used to efficiently move forward in the hiring process by quickly confirming or validating basic information such as a Social Security number or name and address history. Automated searches will provide electronic delivery of process updates and results, eliminating time delays often associated with manual follow-up on important screening components such as employment or education verifications.

CRIMINAL HISTORY

HHG will screen candidates for criminal records to promote a safe, secure workplace by reducing employment-related risk linked to a criminal history. The following searches may be performed depending upon the type of position the candidate is seeking.

Member-Contributory Theft Information Database

HHG will use a member based program where companies share employee theft and shoplifting information to identify applicants with a history of internal theft. The database is built from member contributions and be available exclusively to member organizations. Member contributions are typically proprietary records and not found through traditional public record sources.

National Crime File Search

Some vendors can offer access to a nationwide database of criminal records gathered from across all 50 states. A variety of sources are utilized including Sex Offender Registries, state and county criminal courts and state-level departments of corrections. This search can provide instant results depending on the provider.

Felony and Misdemeanor Search

This county courthouse search includes a search of all felonies and misdemeanors on all indexes available at the main county seat court location.

Motor Vehicle Report

Holistic Health Group, Inc.
477 Wareham st
Middleborough, MA 02344
info@holistichealthgroup.org

A Motor Vehicle Report (MVR) reveals the status of an applicant's driver's license and any violation history. This search should be conducted on all candidates who will have driving responsibility for HHG, including those who will not only drive an HHG vehicle but will also drive a personal vehicle on HHG time or for HHG purposes.

VERIFICATION AND QUALIFICATION SOLUTIONS
The Human Resources Manager may potentially utilize the following solutions depending on the level of security required for the position.

Social Security Number Verification (SSNV) This search matches the input information against millions of consumer header credit files contained in the databases of nationwide credit reporting agencies. The SSNV returns other names and addresses associated with the identifying information used to request the report.

Credit Check
This search matches the candidate's information to information held by the Credit Bureaus and returns the candidate's credit report.
Employment and/or Education Verification
These two products are used to verify the information provided by the candidate.

Employment Eligibility
An employment eligibility verification service will be used to streamline the Form I-9 process. The HHG will participate in the E-Verify program to confirm every new hire's employment eligibility by sending the information used to complete the I-9 through the Social Security Administration (SSA) and Department of Homeland Security (DHS) databases.

SUBSTANCE FREE WORKPLACE
HHG will strive for maintaining a safe working environment. In order to keep employees and customers safe HHG will have alcohol, smoke, and drug-free workplace policies in place pursuant to CCC regulation 935 CMR 500.105. Employees will be required to be sober while within the facility. Employees and managers will be required to immediately report any incidents involving alcohol, smoke and drugs to the Human Resources manager

OCCUPATIONAL AND BIOMETRIC SERVICES
HHG will utilize a drug testing service provider who will track results, provide reports and ensure HHG stays in compliance with the CCC agency regulations. The service provider will assist HHG in developing or updating drug testing policies, coordinate and store Driver

Holistic Health Group, Inc.
477 Wareham st
Middleborough, MA 02344
info@holistichealthgroup.org

Qualification Verification files and meet immunization and medical exam requirements including receiving the exam results

A basic DOT Five Panel Drug Test (urine conventional) will be used. The following drugs will be tested from the applicant's urine sample: amphetamines (amphetamine and methamphetamine), benzoylecgonine (cocaine metabolite), opiates (codeine and morphine) and phencyclidine (PCP).

ADJUDICATION AND ALERTS
HHG will provide a criminal records adjudication policy as part of the screening process. FCRA-mandated Adverse Action letters for candidates that fail to meet specific screening criteria set forth by the organization will be delivered to candidates.

MONITORING
A Monthly Compliance Exception Report is completed for the employment screening process. The report informs the Human Resources Manager which candidates have completed various parts of the screening process and which have not. The report also updates HHG to which components are missing from a candidate's employment screening process.

The Human Resources Manager will cause all required criminal and drug screens to be updated every two years. All employees are required to notify HHG whenever they have any encounter with law enforcement. The Human Resources Manager will determine if a Level 2 background screening should be performed upon the employee's notice. A post-accident drug screening may be performed at the Human Resources Manager's discretion or if required for worker's compensation purposes.

STAKEHOLDER FEEDBACK
The Human Resources Manager in coordination with the Chief Operations Manager, and Chief Financial Officer will solicit and record feedback from customers, vendors, consultants, community members and groups, law enforcement and other interested parties about the competence of HHG and our staff. Feedback requested from stakeholder should address the quality of interactions with employees, any changes in HHG policies or procedures directly affecting the stakeholder and the effectiveness of the HHG overall.

OBSERVATION AND PERFORMANCE REVIEW
To evaluate the effectiveness of training through observation of employee performance, these evaluations should consider employee's adoption of policies, procedures, concepts and attitudes presented in the training for new employees; level of improvement, drive or lack

Holistic Health Group, Inc.
477 Wareham st
Middleborough, MA 02344
info@holistichealthgroup.org

thereof toward improvement in the performance of **veteran employees**; adoption of the training topics in practice and how well they are working; department managers and trainer observations of employee attitudes, methods or competency and the level of discussion between employees and department managers regarding training topics presented on an ongoing basis.

STAFFING PLAN

The staffing plan will develop in three phases which are hiring, training and professional development. Hiring of employees will only be done according to established procedure when a position in the employment structure is open or management determines a new position should be created. The training will provide policies and procedures to be reviewed at length. Professional development practices will then supplement this initial training. The training and professional development will ensure that all HHG staff grasp and comprehend the policies, procedures and relevant regulations to abide by for operations at the facility.

HHG will make sure that the best candidates are hired in a process that eliminates racial and socioeconomic biases.

STAFF ACQUISITION PROCESS

1. Identification of need;
2. Job classification and job description preparation;
3. Solicitation of the vacant position utilizing the methods that best fit the position;
4. Reviewing resumes on qualified candidate;
5. Performing and recording reference checks on qualified candidates;
6. Scheduling first interviews with the Human Resources Manager;
7. Scheduling second interviews with strong candidate with the HR Manager and department hiring manager;
8. Delivery of an offer letter to the first choice candidate;
9. Performing criminal background check on selected candidate;
10. Send application to the state for registration with the CCC;
11. Completion of the probationary period.

The Staffing and Training Plan is based on business plan assumptions and best practices and may be adjusted by in accordance with actual operating needs.
It is our policy to ensure that all employees receive professional and appropriate training on compliance with regulatory agency regulations, the therapeutic use of cannabis, safety, security, incident management and diversion and theft prevention.

Holistic Health Group, Inc.
477 Wareham st
Middleborough, MA 02344
info@holistichealthgroup.org

HIRING

HHG's Human Resource Manager will coordinate with management to acquire all staff. The acquisition process may vary depending on the vacant position and special circumstances. The acquisition process will be managed by the Human Resource Manager and will always include: performing a criminal background check on the selected candidate to determine eligibility for Cannabis Control Commission registration; application to Cannabis Control Commission; new hire orientation and training only upon successful registration; and completion of the probationary period.

HHG upon receiving interest from any potential employee provides and application which helps identify the company's hiring targets; including primarily individuals who identify as members from a community of disproportionate impact, and residents of the company's host community All staff and Managers must nevertheless comply with all **EEOC** guidelines when managing employee issues. None of our policies or practices discriminate based on or conflict with laws regarding the following: race; height and weight; credit rating or economic status; religious affiliation or beliefs; citizenship; marital status and number of children; gender; arrest and conviction; security/background checks for certain religious or ethnic groups; disability; medical questions and examinations. Positions will only be filled according to the established protocols:

Background Check

Any applicant who has submitted a complete application for employment will have a professional background check conducted. This investigation will be in addition to verification that the potential employee is or will soon be licensed as a cannabis employee and thus allowed to work in the facility. The investigation will be conducted to ensure the potential employee does not have any felony convictions which would bar them from employment. The investigation will also check for any crimes of moral turpitude, whether misdemeanor or felony. Any indication of past crimes of moral turpitude will be a bar to employment. Once the applicant is determined to have passed a background check, a first interview will be initiated.

1st Interview

The first interview will consist of a face to face meeting with the Manager of the department the applicant is interviewing for a position in. The purpose of this interview will be to help determine any potential employee's: 1) level of knowledge regarding cannabis operations; 2) existing skill set relevant to the duties of the job offered; 3) their capacity to learn new skills and grasp concepts (specifically regulatory concepts); and 4) potential for deception as an employee. At least 2 references will be contacted and details of the interview confirmed. A solid background (or an appropriate level of education/experience pertaining to the position offered), a clean record and indicia of honesty will be requisites for the second interview.

Holistic Health Group, Inc.
477 Wareham st
Middleborough, MA 02344
info@holistichealthgroup.org

Final Interview
The final interview will be conducted by management. The management will ask a variety of questions intended to assess the applicant's ability to interact with others and work according to HHG's policies. The final decision will be made by management with input from the department manager who conducted the first interview. For management positions, the ownership and/or senior management will jointly conduct the final interview with the department manager retaining the final decision after consulting with managing members.

TRAINING
All new hires will be required to go through a training period. Potential employees will be advised of all employment policies, the life cycle of cannabis and its growth process and the proper procedures to employ while performing their duties. Educational training will consist of presentations given by the department manager. The presentations will be supplemented with hands on training to demonstrate the material included in the presentations. All employees will go through additional training with their Manager based on the employment role.
Being in an industry that is constantly changing requires companies to be aware of recent market developments and trends throughout the industry. HHG takes a proactive approach to continually provide progressive training and interactive learning to our employees. This is conducted both at the individual facilities by certified HHG trainers, but also electronically and telephonically when necessary. By exposing employees to constant training and developments, HHG values its employees and encourages their retention with HHG.

By training employees, it allows them from day one to have the ability to learn processes and procedures in order to take on additional responsibilities throughout the course of their employment with HHG. With the ability to grow within HHG and move at their own pace, HHG encourages retention of all employees.

Our collaborative training program is designed to educate employees on best practices for maintaining their personal safety and the safety of HHG products, including comprehensive emergency and incident management training. Training sessions may include virtual web collaborations, onsite experience and OSHA Occupational Safety Training.

HHG Employee Training
No HHG employee or consultant may work on-site prior to receiving orientation training or when any required critical training is eight weeks of more past due. The HR Manager will

Holistic Health Group, Inc.
477 Wareham st
Middleborough, MA 02344
info@holistichealthgroup.org

provide all relevant and adequate training for each individual involved in HHG operations. Training will be tailored to the roles and responsibilities of the job function of each employee and at a minimum must include training on confidentiality, security controls, emergency response protocols and regulatory agency regulations as well as Federal statutes regarding the use of cannabis. Each employee will receive a minimum of eight hours of ongoing training annually or as deemed necessary by HHG Managers.

Module Based Training

HHG employs a strategy of module based training. Each module will cover a single topic in -depth.

Training modules include:

1. New employee orientation;
2. Train the trainer;
3. Monthly department meetings;
4. Compliance, regulation and law;
5. Confidentiality;
6. Safety;
7. Security;
8. Emergency and incident management;
9. Inventory management and diversion prevention;
10. Cannabis science;
11. Community and customer relations;
12. Recordkeeping;
13. Product handling and sanitation; and
14. Transportation.

HHG may develop and implement new modules as deemed necessary. General employee training will largely be department focused and relevant to the operational processes each employee will follow on a daily basis. HHG will reassess all modules annually in order to determine if the updated training is necessary to maintain a compliant operation.

Training Evaluation

In order to achieve the high standards of quality, efficiency and compliance HHG sets forth, the Human Resources Manager shall evaluate the training program annually. Based on the results of this evaluation, the HR Manager will implement any necessary changes and determine the need for re-training of staff. The Chief Executive Officer, Chief Financial Officer and Chief Operations Officer must approve any major training program changes. HHG cannabis science training must address the endocannabinoid system, clinical trial information, efficacy and

dosing, strains and genetics, methods of use and types of products, condition management and side effects.

The Human Resources Manager will solicit and record feedback on the quality and efficacy of a training module from employees that received the training. Feedback may be solicited utilizing post training group discussions, individual interviews and anonymous surveys

Oversight
The management structure assigns responsibility for the different aspects of operation to individual Managers and staff so that every employee on every level will be accountable to a higher position. Each department has defined responsibilities and must report to management on a weekly basis regarding the duties they were assigned and progress. The Operations and Management Practices Plan outlines the entire process and procedures to employ. The plan also defines the employment structure and the relation of employment policies to operations. The manual details the administrative processes to be employed in various situations, including disciplining employees. All discipline will be handed down by the department manager or HR Manager to help keep relations between department Managers and ground level employees smooth.

Employee Manual
Upon licensing and commence of operations, all HHG Staff will undergo a mandatory training period. During the first day of training, an employment manual will be issued to employees. The Employment manual will set forth HHG policy regarding administrative matters, including terms of employment, what is expected of employees and procedures for discipline. Each employee must read through the manual and sign a contract acknowledging they have received, read and understand the HHG policies.

Operations Manual
The second stage of training will be an educational portion regarding cannabis and procedures. The manual will begin with a background of commercial cannabis, identify relevant legal regulations, break down the HHG structure/roles of employees and set forth Standard Operating Procedures for each phase of operation.

Standard Operating Procedures will provide a detailed breakdown of the duties (what), methods (how) and schedule (when) by which each employee will perform the tasks of their respective positions. The HR Manager will develop training curriculum to educate new employees. Managers will be actively training the new employees on the tasks expected of them and answering questions. At the end of the training period, the prospective employees

Holistic Health Group, Inc.
477 Wareham st
Middleborough, MA 02344
info@holistichealthgroup.org

will be given a short test regarding the policies and procedures, passage of which is a prerequisite for employment.

SYSTEMS TRAINING

Inventory System

The HR Manager and department managers will be responsible for developing and conducting training programs for each employee who will be using the METRC software. METRC representatives offer online training for HHG's management team in the various uses of the software and provide training manuals and other materials to assist in training employees. All General Management and Managers will be responsible for knowing how to properly operate the METRC software.

EMERGENCY TRAINING

Fully operational, the operating hours of the cultivation facility will be 24 hours a day/7 days a week. The operating hours for the dispensaries will typically be 11 hours a day, 7 days a week. A limited number of employees will be necessary for nights and weekends but operations will continue. At least one Security Officer will be on-site during all opening hours of the cultivation center and the dispensary. Security will be hired in-house and via a police detail as needed. All employees employed by HHG will go through a security training/debriefing with security regarding the features of the facility, the role of security in operations and procedures in case of an emergency.

In the case of an emergency, employees will have several methods for contacting local law enforcement. The most common will be immediate referral to on-site security personnel. Security personnel have been hired to provide such services. In the event security is not immediately reachable, staff will be trained to alert local authorities. In no event should an employee attempt to handle or confront an emergency situation. All matters should be referred to security or local law enforcement.

Each new hire will begin work on a three-month trial period of employment. At the end of the three months the department manager will conduct an assessment of the employee's performance.

FOOD HANDLING

All employees whose job includes contact with cannabis products (edible or otherwise), including cultivation, production or packaging must be trained in food handling requirements found in applicable laws and regulatory agency regulations.

Holistic Health Group, Inc.
477 Wareham st
Middleborough, MA 02344
info@holistichealthgroup.org

INVENTORY LOSS OR IRREGULARITIES AND REPORTING TRAINING

Operational policies will restrict employee access to areas where they have legitimate work tasks. All areas where cannabis is stored will be locked and monitored via Closed Circuit Television. The background checks and hiring process will weed out applicants with criminal or amoral histories. Employment policies will outline the consequences of employee theft and the security briefing will make employees aware of the serious of the matter. Cumulatively, these policies will assist in preventing employee theft of cannabis, cannabis product or growing materials.

All staff is responsible for notifying the agent-in-charge of any loss or theft of cannabis from the facility so that they can promptly document and report the loss or theft to the appropriate manager and the regulatory agency. Employees will have a whistleblower policy in place to ease the concerns of any employees who suspect diversion of cannabis or cannabis products from the facility by another employee. The report will also be submitted to the Compliance Officer for further review and investigation.

PROFESSIONAL DEVELOPMENT

The purpose of the professional development stage is to provide continued education to HHG employees regarding new operational methods, changes in rules/regulations and innovations in techniques. HHG will evolve with the industry, embracing new technologies or processes that increase efficiency. The results will be reported to the HR Manager where necessary to determine if a promotion, raise, demotion or termination is warranted.

Every three months, department managers will evaluate employee performance. The results will be reported to the HR Manager. When necessary, the CEO, CFO, and COO will be consulted to decide if a promotion, raise, demotion or termination is warranted. Training will be used to address any deficient performance and educate the employee about the proper methods to use.

Hands-on instructional training to address any problems in technique or method by which a employee is performing a task.

Group meetings to ensure all employees are communicating and aware of any changes. Each department will hold group meetings on a weekly basis. The entire facility will meet as a group at least once a month to address the state of affairs.

PLANS FOR RETENTION OF KEY EMPLOYEES

Holistic Health Group, Inc.
477 Wareham st
Middleborough, MA 02344
info@holistichealthgroup.org

HHG takes retention of its staff very seriously. HHG recognizes the value its employees bring to the HHG and works diligently to maintain a positive and supportive work environment for employees. With the vertical business integration comes numerous opportunities for employees to grow and flourish within the HHG company. Employees will have the option of working and learning about cultivation, retail, manufacturing and processing through our work share initiative.

Being in an industry that is constantly changing requires companies to be aware of recent market developments and trends throughout the industry. HHG takes a proactive approach to continually provide progressive training and interactive learning to our employees. This is conducted both at the individual facilities HHG trainers, but also electronically and telephonically when necessary. By exposing employees to constant training and developments, HHG values its employees and encourages their retention with the HHG.

By training employees, it allows them from day one to have the ability to learn processes and procedures in order to take on additional responsibilities throughout the course of their employment with the HHG. With the ability to grow within the HHG and move at your own pace, HHG encourages retention of all employees.
However, as with any industry, there is turnover of employees. By proactively and progressively training existing employees, HHG ensures that if there is turnover of employees we can quickly staff the position in a manner that creates minimal to no disruption to our clients, their facilities and their production levels.

REPORTING STRUCTURE
Each department manager is responsible for ongoing performance evaluations, performance issues and recognition, promotions and disciplinary actions in their department. Managers are required to communicate all necessary information on employee performance to the HR Manager as often as necessary. Managers are required to complete formal performance reviews annually and at the end of any probationary period.

HHG JOB DESCRIPTIONS
CHIEF OPERATIONS OFFICER
Experience managing a cannabis facility or other type healthcare facility preferably with a retail and/or regulatory component; analytically and socially intelligent; able to take responsibility for the company while maintaining a problem-solving, vision-based attitude; legal and financial knowledge; simultaneous focus on short- and long-term goals and ability to identify and respond to problems quickly and appropriately.

Holistic Health Group, Inc.
477 Wareham st
Middleborough, MA 02344
info@holistichealthgroup.org

CHIEF MEDICAL OFFICER
Ability to research and analyze new cannabis science; previous experience as medical director for a non-profit or alternative health care facility; ability to identify training and informational deficiencies and respond by implementing specific measures to counter these inadequacies; and ability to develop informational materials and training for staff and patients.

CHIEF FINANCIAL OFFICER
Experience managing finances for a cannabis facility or other type production business preferably with a retail and/or regulatory component; analytically and socially intelligent; able to take responsibility for the company while maintaining a problem-solving, vision- based attitude; legal and financial knowledge; simultaneous focus on short- and long-term goals and ability to identify and respond to problems quickly and appropriately.

HUMAN RESOURCES MANAGER
Prepares HHG handbooks and job duties. Keeps all employee files and records and is in charge of all hiring, termination and employee reviews. Ensures operations and staff are compliant with state and local regulations.

Must have past experience managing employee relations, adhering to compliance and drafting standardize company policy. Ability to draft implement measures correcting HHG needs.

COMPLIANCE MANAGER
Drafts and monitors all compliance procedures. Continually reconciles and monitors cannabis inventory to maintain full compliance with regulatory agency regulations. Maintains communication with all state and local law enforcement and regulatory agencies in order to ensure complete compliances.

Must have extensive knowledge of regulatory agency regulations and continual compliance training. Has extensive knowledge of all regulatory agency regulations pertaining to cannabis and maintains relationships with local municipalities and enforcement.

Excellent analytical skills and ability to comprehend complex legislature and apply implications on operations as well as strong communications skills are required to maintain dialog and relationships with state department officials, law enforcement, landlords, city personnel, as well as management.

SECURITY OFFICER

Holistic Health Group, Inc.
477 Wareham st
Middleborough, MA 02344
info@holistichealthgroup.org

Demonstrated experience in a security management role; able to develop and manage security protocols in accordance with HHG policies and able to identify and respond to breaches in security or dangerous situations. Must have knowledge of cannabis policy and law and be able to provide security for transportation and delivery services;

QUALITY CONTROL MANAGER
Demonstrated management experience in a quality control program; experience performing laboratory testing and scientific research; demonstrated experience in a position requiring critical-thinking, problem-solving, planning and assessment; experience in a product withdrawal or recall situation; knowledge of cannabis science and testing methods; and knowledge of cannabis policy and law.

DIRECTOR OF CULTIVATION Demonstrated experience managing employees and cultivation and business operations; demonstrated experience in a position requiring critical-thinking, problem-solving, planning and assessment; computer literacy in word processing, METRC and database management; and knowledge of cannabis policy and law.

TERMINATION OF EMPLOYEES
HHG will terminate any employee or registered agent that violates the following:

- Diverted marijuana, which shall be reported to law enforcement officials and to the Commission;
- Engaged in unsafe practices with regard to operation of the Marijuana Establishment, which shall be reported to the Commission; or
- Been convicted or entered a guilty plea, plea of nolo contendere, or admission to sufficient facts of a felony drug offense involving distribution to a minor in the Commonwealth, or a like violation of the laws of another state, the United States or a foreign jurisdiction, or a military, territorial, or Native American tribal authority

The Executive team, management team, security team and HR team will decide who will be terminated and coordinate the immediate removal of said employee from the facility.

Holistic Health Group, Inc.
477 Wareham st
Middleborough, MA 02344
info@holistichealthgroup.org

Maintaining of financial records

A thorough recordkeeping plan maintains the regulatory integrity of the Adult use marijuana Program and creates a record of activities, transactions, and decisions which safeguards a company's information and also holds it accountable for its actions.

HHG has established stringent recordkeeping protocols which demonstrate fidelity to compliance and security, and safeguard patient safety. Inventory protocols, electronic tracking system use, equipment maintenance, and other extensive business records will be created and maintained in full compliance with Cannabis Control Commission ("Department"), OSHA and local regulations.

In compliance with 935 CMR 500, HHG will maintain a daily log of each day's beginning inventory, acquisitions, amounts purchased and sold, disbursements, disposals, and ending inventory. HHG will also record prices paid and amounts collected from patients and caregivers in the electronic tracking system.

The inventory protocols require all inventories and inventory audit records to be retained as part of recordkeeping policies and to ensure oversight of facility management and personnel, in compliance with 935 CMR 500. As part of this comprehensive recordkeeping plan, HHG will maintain critical business operations including:

- Inventory tracking, from purchase order to sale;
- Human resources data for all employees;
- Access Control System records;
- Transaction records;
- Standard Operating Procedure Compliance;
- Recall procedures and documents pertaining to recall actions; and
- Waste management, specifically including records of marijuana products destroyed at the dispensary.

Keeping complete, detailed, and organized records of inventory and all dispensing transactions is critical to ensuring that patients receive the highest quality medicine in its purest forms.

ENTERPRISE RESOURCE PLANNING

HHG will utilize METRC's to track plant based processes and the Foliogrow/Greenbits app for seed-to-sale software Enterprise Resource Planning ("ERP"). Foliogrow/Greenbits uses bank-level encryption to comprehensively manage all inventory and satisfies HIPAA-security standards.

METRC tracks every purchase of every product in inventory within the dispensary, both as active inventory and in back stock, every sale, in addition to tracking adult use marijuana waste or recalled products scheduled for return to grower/processors.

METRC supports real-time monitoring of inventory, along with sales totals and patient counts. The platform will allow authorized employees to track purchasing habits and accurately predict demand. The analysis of historical sales data and inventory trends will be effective for forecasting inventory needs. METRC's will be supplemented with iAuditor, an operational protocol application. iAuditor will remind personnel that it is time for an inventory audit or a sanitation and safety inspection, provide a digital checklist and form to conduct the audit, then archive the audit the checklists, forms, and details.

Business management platform data and records will be stored electronically and be subject to electronic backup requirements. However, employees will be required to adhere to the same recordkeeping policies and procedures for printed, hand-written, or other analog records.

ACTIVE AND INACTIVE RECORDS / RETENTION PERIOD

An active record is one that is needed for operations and is frequently used. An inactive record is not needed to operate the business and is preserved until the expiration of its retention period. Unless specifically exempted, all records will be deemed inactive 180 days after their last use.

HHG applies a four (4)-year retention period to all records including the video files from the surveillance cameras and the records of physical access controls (for example, the daily log showing which employees used their identification credentials to open which doors). At the conclusion of the retention period, HHG will determine, on a case-by-case basis, whether certain categories of inactive records should be destroyed or preserved.

DIGITAL RECORDS

METRC utilizes proprietary programming and computer coding. The data records are stored in the cloud and are indecipherable without METRC decoding. HHG bears the responsibility archive its records in durable and "portable" formats that can be used without the METRC platform.

At the conclusion of each business day, a dispensary manager downloads a daily report in a Portable Data File (.pdf) capturing all of the day's activities and operations, including all transactions with patients and vendors. Also, a dispensary manager will upload the daily report

Holistic Health Group, Inc.
477 Wareham st
Middleborough, MA 02344
info@holistichealthgroup.org

to the company's server, in a secure file that can only be accessed by either of the Executive Officers.

ACCESS CONTROL

A dispensary employee's access to METRC and dispensary records is defined by the employee's job function; this is commonly known as Role-Based Access Control. For instance, a patient-facing dispensary technician will have access to patient records; inventory managers will have access to inventory management records; security personnel will have access to visitor logs and stored surveillance system files.

Each employee, manager, and executive will have unique log-in credentials consisting of a unique username and password. Logs of users logging into METRC will be archived to establish accountability records.

ADULT USE MARIJUANA PRODUCT INVENTORY RECORDS

HHG will create and maintain written and electronic records of all inventories and include the date of the inventory, a summary of findings, and the employee identification numbers and titles or positions of the individuals who conducted the inventory review. To ensure the proper management of inventory, all items that enter and leave company facilities will be tracked, monitored, and systematically arranged.

Through employee training, the company will create a thorough understanding of both the electronic tracking system and the business management platform. By preparing employees to input accurate data daily, HHG can ensure the tracking system and business management platforms match and reflect the correct acquisitions, sales, waste and losses. Adult use marijuana products will be received and logged into inventory METRC as a lot, batch, or grouping of products. The inventory will be placed into a product storage bin/container, and identified as back stock or ready-for-sale, active inventory. Only active inventory batches, lots, or groups will be used to fulfill orders from patients and caregivers.

ADULT USE MARIJUANA INVENTORY AUDITING (ACTIVE INVENTORY)

Sellable inventory will be divided into two (2) separate types: active inventory and back stock. Active inventory is the inventory that will be utilized to stock the sales floor. Back stock will be the items that remain static in storage until active inventory is depleted and requires restocking.

Holistic Health Group, Inc.
477 Wareham st
Middleborough, MA 02344
info@holistichealthgroup.org

RECEIPT AND SALE OF ADULT USE MARIJUANA

All adult use marijuana products will be tracked and monitored in the electronic tracking system METRC and by physical inventory audits. Each activity associated with any adult use marijuana product will include a digital time, date, and location stamp within the Business Management Platform.

This timestamp will be used to produce a receipt that may be printed and made available to the Department, law enforcement, and company management. Data reflected on platform receipts will also be used to produce transport manifests as required by. Included in auditing procedures is the accurate documentation of transportation dates, approximate times of departure/arrival, transport vehicle specification, delivery route information, and other data that may pertain to the successful tracking and monitoring of company inventory.

Inventory procedures include counting, storage, and facilitating of funds transferred to and from HHG. Funds will be managed by employees trained to receive, deliver, count, sort, document, and securely store cash, checks, and other methods of payment. Money will be accounted for and recorded via multilevel auditing and secure accounting procedures. Funds will be counted and temporarily stored in lockable bank bags in the safe or vault area of the facility until the funds are safely transferred to the next individual, as defined in currency chain of custody procedures. Funds used for the purchase of adult use marijuana products will be linked to specific items, lots, and batches within our business management platform.

METRC will clearly demonstrate the exact products sold, the price of the items, methods of payment, and account details of other adult use marijuana organizations where funds were received or paid. Receipts of purchases and sales will be made readily available to adult use marijuana organizations, law enforcement officials, and the Department. Receipts will be observed for their accurate reflection of the transfer of adult use marijuana products and funds as part of daily sales and inventory reports.

Receipts for sale of cannabis based products produced in the outdoor cultivation area will be check. HHG will not accept or process cash or credit card for the sale of the initial outdoor cultivation harvest. All checks will be deposited in Century Bank.

RECORDKEEPING OF TRANSPORT

HHG will keep detailed records of all transport of adult use marijuana products, including:

- Transport Manifests;
- Receipts;
- Invoices;

- Bills of Lading;
- Shipping Invoices; and
- Packing Slips or any other shipping documents.

ACCOUNTING DATA

HHG is committed to the transparency of accounting data and adhering to Generally Accepted Accounting Principles (GAAP) in financial reporting. To achieve this goal, the company has contracted with an accountant, M. Jackson Accounting and Bookkeeping LLC, who will provide HHG a wide range of tax, accounting, audit, business advisory, planning, payroll and support services to manage company financials and reporting. In addition, we have brought on an inhouse office manager and a corporate accountant that is acquainted with IRS chapter 280E. All financial records will be maintained on secure, internal computer networks and will be duplicated using the electronic records backup system, ensuring HHG will never experience a catastrophic loss of financial data.

The following business records shall be maintained within our ERP pursuant to 935 CMR 500:

- Assets & Liabilities
- Monetary transactions
- Books of accounts / Chart of accounts
- Sales records
- Salary and wages paid to each employee

APPROVED VENDORS

Sourcing the most qualified and effective vendors to service all aspects of operations, especially facility security and equipment maintenance, is imperative to successfully serving the patients of the Commonwealth. Only owners, principals, and designated employees will be permitted to enter into business contracts on behalf of HHG. They will be required to ensure vendors register with the company and are designated as an approved vendor by the Department, prior to providing goods or services. Completed vendor records, W-9 forms, and all other accounting records will be maintained by accounting personnel in compliance with IRS and any other regulatory requirements.

A list of approved vendors will be kept on site for easy reference by the Dispensary Manager and management personnel. This list will include, but is not limited to, the following vendor types:

- Marijuana Transport;
- Waste Disposal;
- Pest Management;

Holistic Health Group, Inc.
477 Wareham st
Middleborough, MA 02344
info@holistichealthgroup.org

- Security System Service & Repair;
- Security Firm;
- IT Firm;
- Software Technical Support;
- Facility Services;

EMPLOYEE RECORDS

The Human Resources department will be required to maintain accurate personnel records for each employee. Such records must be maintained for at least four (4) years and include:

1. All materials submitted to the Department;
2. Completed IRS W-4 Form;
3. A copy of their Employee ID;
4. Documentation of verification of references;
5. The job description or employment contract that includes a description of duties, authority, responsibilities, qualifications, and supervision;
6. Documentation of all training & in-service received by the employee and the signed statement of the employee indicating the date, time, and place the training was received and the topics discussed, including the name and title of presenters;
7. Attendance records;
8. Records of any relevant professional licensure issued by a regulatory agency and verification of education requirements for licensure;
9. Documentation of periodic performance evaluations;
10. A record of any disciplinary action taken; and
11. Exit Interviews.

COMPENSATION RECORDS

The Human Resources Department will maintain records documenting the salary and wages paid to each employee, stipend paid to each executive manager, and any executive compensation, bonus, benefit, or item of value paid to any individual affiliated with HHG, including executive managers.

Holistic Health Group, Inc.
477 Wareham st
Middleborough, MA 02346
info@holistichealthgroup.org

Quality Control & Testing Procedures

HHG, as a vertically integrated and single co-located Cannabis company for the medical and adult use markets has developed a Quality Control Plan that fully addresses the safety of our customers, our surrounding community and our employees as agents. Our standard operating procedures (SOPs) have been drafted to ensure compliance with the requirements of the Cannabis Control Commission's ("CCC's") regulations. These SOPs specifically address quality control measures and laboratory testing among other topics.

HHG is committed to only producing the safest of products. A robust testing plan will ensure the HHG's products are produced in accordance with good manufacturing practices and held to rigorous testing standards. Product testing will include analysis for potency, terpenes, heavy metal, solvents, pesticides, microbial contamination and shelf life. Tests will be performed onsite for quality control, and a professional independent testing facility will provide further independent data review on all final products tested prior to releasing for distribution.

HHG's operating plan relies on an approach that utilizes to the fullest extent, the expertise of our team, detailed SOPs and an audit and compliance program to ensure customer safety, product safety and compliance.

QUALITY CONTROL EXPERTS

HHG is operated by its executive management team utilizing the services of industry and subject matter experts. Our operations and management team will feature several specialists trained in a wide range of experience from industries requiring strict quality control and best practices. These experts will work together to ensure HHG's operations safeguard the health and welfare of our employee and customers.

HHG will employ the services of a qualified Quality Control Director ("QCD") at all times to oversee processes that pose a potential risk to employee safety, patient safety or product safety. Upon licensing, the HHG intends to engage a professional firm specializing in cannabis science, to fill the QCD position. The QCD will oversee the quality control and assurance functions in HHG operations.

Holistic Health Group, Inc.
477 Wareham st
Middleborough, MA 02346
info@holistichealthgroup.org

STANDARD OPERATING PROCEDURES

HHG will implement quality systems controlled by our SOPs and based on standards to control processes that are critical to product safety. Our QCD will be responsible for oversight of these quality systems while our Chief Operations Officer and General Counsel will ensure our protocols comply with regulatory agency regulations. Every SOP implemented in the cannabis establishment will incorporate employee, community, customer and product safety considerations and will require strict quality control and assurance practices in all of HHG's daily activities.

HHG's extensive quality control protocols address a myriad of product safety requirements including, but not limited to, employee training requirements, proper equipment usage and maintenance protocols, sanitation standards, cultivation protocols, component and product handling and storage, quality control testing, child-resistant packaging, product inserts, label disclosures and product traceability requirements.

The QCD is responsible for updating HHG's SOPs to maintain compliance with all published rules and forthcoming guidance from the CCC on product safety, while our General Manager will maintain the procedures and stay current with best practice and industry innovations.

SOPs will be updated as often as necessary to maintain compliance with all laws and regulations that govern HHG's operations. HHG's General Counsel and COO, under the CEO's oversight, are responsible for incorporating into the SOPs any additions or amendments to the regulations, as well as any guidance or directives published by the regulatory agency. Manager level employees will be responsible for drafting, updating and maintaining the SOPs in their area of supervision.

HANDLING OF MARIJUANA

HHG will ensure that only the leaves and flowers of the female plant are processed in a safe and sanitary manner as described below:

- Well cured and generally free of seeds and stems;
- Free of dirt, sand, debris, and other foreign matter;
- Free of contamination by mold, rot, other fungus, and bacterial diseases;

Holistic Health Group, Inc.
477 Wareham st
Middleborough, MA 02346
info@holistichealthgroup.org

- Prepared and handled on food-grade stainless steel tables; and
- Packaged in a secure area.

Each employee will be required to demonstrate their comprehension of the detailed procedures required prior to performing any task. Additionally, all third-party contractors will be required, by contract, to perform their duties in compliance with HHG policies and regulatory agency regulations as above.

All HHG agents whose job includes contact with marijuana will be trained to conform to requirements for food handlers specified in 105 CMR 500.00 *Good Manufacturing Practices for Food*, and where applicable 105 CMR 590.000 *State Sanitary Code Chapter X: Minimum Sanitation Standards for Food Establishments.* In addition:

1. Agents working in working in contact with Marijuana or non-edible Marijuana Products, including those in HHG's cultivation, production and packaging, are subject to the requirements for food handlers specified in 105 CMR 300.00 *Reportable Diseases, Surveillance, and Isolation and Quarantine Requirements;*
2. Any marijuana establishment employee working in direct contact with preparation of Marijuana or non-edible Marijuana Products shall conform to sanitary practices on duty, including:
    a. Maintaining adequate personal cleanliness; and
    b. Washing hands thoroughly in an adequate hand-washing area before starting work, and at any other time when hands may have become soiled or contaminated.
3. Hand-washing facilities are adequate and convenient and furnished with running water at a suitable temperature. Handwashing facilities shall be located in the Marijuana Establishment in Production Areas and where good sanitary practices require Employees to wash and sanitize their hands, and shall provide effective hand-cleaning and sanitizing preparations and sanitary towel service or suitable drying devices;
4. There is sufficient space for placement of equipment and storage of materials as is necessary for the maintenance of sanitary operations;
5. Litter and waste are properly removed, disposed of so as to minimize the development of odor and minimize the potential for the waste attracting and harboring pests. Operating systems for waste removal shall be maintained in an

Holistic Health Group, Inc.
477 Wareham st
Middleborough, MA 02346
info@holistichealthgroup.org

adequate manner pursuant to 935 CMR 500.105(12);

6. Floors, walls, and ceilings are constructed in such a manner that they may be adequately kept clean and in good repair;
7. There is adequate safety lighting in all Processing and storage areas, as well as areas where equipment or utensils are cleaned;
8. Buildings, fixtures, and other physical facilities are maintained in a sanitary condition;
9. All contact surfaces, including utensils and equipment, are maintained in a sanitary condition. Such surfaces shall be cleaned and sanitized as frequently as necessary to protect against contamination, using a sanitizing agent registered with the U.S. Environmental Protection Agency (EPA), in accordance with labeled instructions. Equipment and utensils are so designed and of such material and workmanship as to be adequately cleanable;
10. All toxic items shall be identified, held and stored in a manner that protects against contamination of Marijuana Products. Toxic items shall not be stored in an area containing products used in the cultivation of Marijuana.
11. HHG's water supply will be from the town, and is sufficient for necessary operations.
12. Plumbing is of adequate size and design, and adequately installed and maintained to carry sufficient quantities of water to required locations throughout the Marijuana Establishment. Plumbing shall properly convey sewage and liquid disposable waste from the Marijuana Establishment. There are no cross-connections between the potable and wastewater lines;
13. HHG's facility features for its employees adequate, readily accessible toilet facilities that are maintained in a sanitary condition in good repair;
14. Products that can support the rapid growth of undesirable microorganisms shall be held in a manner that prevents the growth of these microorganisms;
15. Storage and transportation of finished products shall be under conditions that will protect them against physical, chemical, and microbial contamination as well as against deterioration of finished products or their containers; and
16. All vehicles and transportation equipment used in the transportation of Marijuana Products or Edibles requiring temperature control for safety must be designed, maintained, and equipped as necessary to provide adequate temperature control to prevent the Marijuana Products or edibles from

Holistic Health Group, Inc.
477 Wareham st
Middleborough, MA 02346
info@holistichealthgroup.org

becoming unsafe during transportation, consistent with applicable requirements pursuant to 21 CFR 1.908(c).

17. HHG shall notify the CCC within 72 hours of any laboratory testing results indicating contamination if contamination cannot be remediated and disposal of the production batch is necessary.

Any employee or contractor who acts in a non-compliant or negligent manner will be reprimanded or terminated depending on the severity of their offense. In order to establish an effective operating system with a culture of compliance, all employees and contractors will be required as a condition of employment or contract to report any observed compliance issues to the appropriate party.

AUDIT AND COMPLIANCE

Manager Reviews
Managers will perform scheduled reviews of all operating activities to ensure compliance with HHG's policies and regulatory agency regulations and directives. The COO will oversee the Manager level reviews and will also perform scheduled and random audits with a specific focus on activities related to worker and product safety and security, transportation activities, record keeping, and reporting. Compliance audits will include an examination of video recordings, data systems and paper records, as well as employee and contractor interviews.

Internal Audits
HHG's QCD and Chief Operations Officer are responsible for the implementation and maintenance of an ongoing internal audit program featuring both unannounced and random, as well as regularly scheduled audits. Electronic data, paper records, CCTV recordings and employee interviews will be used to review employee performance in relation to our policies and procedures and regulatory agency regulations.

Corrective Measures
Detailed protocols for corrective measures will be followed for any findings of non-compliance. Any identification of non-compliant activities will require thorough investigation by the COO. The COO will create and supervise a plan of action approved by the CEO. The plan of action will be developed to correct any systemic issues that lead the finding of non- compliance and may require an SOP revision, employee training or

retraining, reassignment of responsibilities or any other action the COO and CEO deem necessary.

Third-Party Inspections
All areas of the cannabis establishment, all employees and contractors, records, and activities, including video recordings will be subject to inspections by the CCC and other government authorities. HHG will provide representatives of the regulatory agency, emergency responders, authorized law enforcement personnel, public health officials and other government officers acting in their official capacity access to its facilities and records as required.

Recordkeeping and Inspections
Thorough records detailing all activities and transactions of HHG will be documented and retained for a recommended minimum of five years or as otherwise required by regulation. The Chief Technology Officer ("CTO") will ensure that all information technology systems used in the operation are capable of meeting regulatory requirements. All data systems used in the cannabis establishment will be secure and will maintain detailed audit trails identifying users, dates, times, access location and changes made to any record. All records will be backed up utilizing a secure cloud server.

TESTING
The Quality Control Manager will establish methods for the analysis of potency, terpenes, residual solvents, pesticide residuals, micro biologicals, Aflatoxin, ochratoxin and heavy metals. Any cannabis or cannabis product deemed a failure by the standards will be remediated and retested with the Quality Control Manager's approval or destroyed.

Quarantine
When necessary, the cannabis facility may quarantine cannabis product and will not transport, distribute, or dispense such product unless the Quality Control Manager releases the hold. Only the Quality Control Manager may release a batch of cannabis for distribution to customers.

Chain of Custody
A rigorous chain of custody will be maintained to ensure that cannabis is not released

Holistic Health Group, Inc.
477 Wareham st
Middleborough, MA 02346
info@holistichealthgroup.org

for distribution until the batch is in compliance with all HHG policies and procedures. From the time that a batch has been packaged for distribution until the independent testing laboratory provides a report detailing passing results, the Quality Control Manager will segregate and withhold from use the entire batch, except the samples that have been removed for testing.

Product Security
Quarantined batches will be held in storage with full camera coverage. All batches will be properly labeled for quarantine and entered into a METRC system with a quarantined status. No batch will be transferred from quarantine until the Quality Control Manager releases the batch in the system for transfer.

Storage Conditions
In addition to security requirements, strict environmental controls as required in all quarantine holding areas. All cannabis must be housed in a sanitary area with optimal environmental conditions to preserve the identity, purity and strength of the products. The Quality Control Manager will determine the appropriate storage conditions for each product manufactured.

Training Required
All employees will be trained by the Quality Control Manager to conform to the HHG's quarantine policies and procedures. No Analytics Technician may release batches from quarantine unless the Quality Control Manager approves and documents their authorization in the employee's training record.

TESTING REGIME
The Quality Control Manager may perform any test he or she deems necessary at any time and will establish the HHG's testing requirements and sample size required for in-process and finished products.

PESTICIDES, RESIDUAL SOLVENTS AND HEAVY METALS
HHG will only perform internal testing for pesticides, residual solvents and heavy metals in the event the Quality Control Manager deems necessary. If contamination could be present in plant material or extracted oil due to suspect cultivation methods, components, excipients, or other contributing factors, the tests will be performed.

Holistic Health Group, Inc.
477 Wareham st
Middleborough, MA 02346
info@holistichealthgroup.org

HHG will also maintain a robust incoming inspection and supplier control program that will test and control inputs to avoid product contamination and adulteration. If the laboratory detects an adverse level of contaminants, all materials, or products that compose the batch tested, will be quarantined until an investigation determining the source of contamination is completed and a determination on batch status is made.

ACCEPTABLE LIMITS

HHG has adopted the following minimum acceptable limits to be implemented unless otherwise directed by future legislation or regulatory agency regulation. Any cannabis product that does not meet the HHG's acceptable limit standards will be remediated at the HHG's discretion. All rework must be approved by the Quality Control Manager. Any cannabis product that fails a recommended two rounds of testing will be destroyed in accordance with the HHG's waste policies.

Potency

[No limits] are applied to terpene quantification.

Terpenes

[No limits] are applied to terpene quantification.

Heavy Metals

The American Herbal Products Association provides manufacturers of herbal products with general recommendations for maximum heavy metals levels in herbal products, based on the daily recommended product intake amount. The most appropriate method for quantification of metals in medicinal products is an inductively coupled plasma-mass spectrometry (ICP-MS) method of the US Food and Drug Administration (FDA), which analyzes arsenic, cadmium, chromium, lead, mercury and other heavy metals.

The cannabis monograph of the Netherlands OMC (2007) considers the risk of metal contamination of cannabis grown under controlled conditions to be low. The methodology found below will cover the subsequent list of heavy metals in the Elemental Analysis Manual for food and related products:

Holistic Health Group, Inc.
477 Wareham st
Middleborough, MA 02346
info@holistichealthgroup.org

Metals	**Limit µg/daily dose**
Inorganic arsenic	10.0
Cadmium	4.1
Lead	6.0
Methylmercury	2.0

Pesticides
Any pesticide/herbicide/fungicide used during production of the cannabis production can be tested using applied method validation protocols with the FDA's Pesticide Analytical Manual. The HHG has applied the most recent pesticide limits adopted in the state of Massachusetts.

For each specific analyte analysis, the laboratory will verify that for any of the products listed that are used in cultivation, the residue is no greater than the concentration indicated as follows:

1. Abamectin(AvermectinB1aandB1b)-0.005ppm

2. Acephate-0.1ppm

3. Acequinocyl-0.02ppm

4. Baygon(Propoxur)-0.02ppm

5. Bifenthrin-0.05ppm

6. Bifenazate-0.1ppm

7. Boscalid-0.05ppm

8. Captan-0.05ppm

Holistic Health Group, Inc.
477 Wareham st
Middleborough, MA 02346
info@holistichealthgroup.org

9. Carbaryl-0.02ppm

10. Chlorpyrifos - 0.01ppm

11. Cyfluthrin (Baythroid)- 0.01ppm

12. Cypermethrin - 0.05ppm

13. Diazinon - 0.05ppm

14. Dichlorvos - 0.02ppm

15. Dimethomorph - 0.05ppm

16. Ethephon - 0.002ppm

17. Etoxazole - 0.01ppm

18. Fenpyroximate - 0.015ppm

19. Fipronil - 0.01ppm

20. Folicur (Tebuconazole) - 0.05ppm

21. Hexythiazox - 0.02ppm

22. Imazalil- 0.01ppm

23. Imidacloprid - 0.02 ppm

24. Imidan (phosmet) - 0.04ppm

25. Malathion - 0.1ppm

26. Metalaxyl - 0.02ppm

27. Myclobutanil- 0.02ppm

Holistic Health Group, Inc.
477 Wareham st
Middleborough, MA 02346
info@holistichealthgroup.org

28. Omite (Propargite) - 0.1ppm

29. Permethrin (cis 39%, trans 59%) - 0.05ppm

30. Piperonyl butoxide - 0.1ppm

31. Pymetrozine - 0.02ppm

32. Pyraclostrobin - 0.02ppm

33. Pyrethrins (mix of isomers) - 0.05ppm

34. Quinoxyfen - 0.08ppm

35. Resmethrin - 3ppm

36. Spinosad - 0.01ppm

37. Spirodiclofen - 0.01ppm

38. Spiromesifen - 0.01ppm

39. Systhane (myclobutanil) - 0.02ppm

40. Tetrachlorvinphos (Z) - 0.05ppm

41. Trifloxystrobin - 0.01ppm

Residual Solvents The American Herbal Products Association provides manufacturers of herbal products with general recommendations for maximum residual solvent levels in herbal products, based on the daily product intake amount. HHG will utilize $Co2$ and ethanol known as safe for human consumption. For each specific analyte analysis, the laboratory will verify that for any of the products listed that were used in extraction, the residue is no greater than the concentration indicated as follows:

Solvent	**Limit mg/daily exposure**

Holistic Health Group, Inc.
477 Wareham st
Middleborough, MA 02346
info@holistichealthgroup.org

Acetone	50
Ethylene Glycol	6.2
Heptane	50
Hexane	2.9
Isopropyl acetate	50

Microbial and Fungal The HHG has adopted the use of the [most current] American Herbal Pharmacopoeia recommended limits for orally consumed botanical products in the US unless otherwise directed by new legislation or regulation.

CFU/g	**Total viable aerobic bacteria**	**Total yeast and mold**	**Total coliforms**	**Bile- tolerant gram-negative bacteria**	**E.coli (pathogenic strains) and Salmonella spp.**
Unprocessed materials*	10^5	10^4	10^3	10^3	Not detected
Processed materials*	10^5	10^4	10^3	10^3	Not detected
CO_2 and solvent based extracts	10^4	10^3	10^2	10^2	Not detected

*Unprocessed materials include minimally processed crude cannabis preparations such as inflorescences, accumulated resin glands (kief) and compressed resin glands (hashish). Processed materials include various solid or liquid infused edible preparations, oils, topical preparations and water-processed resin glands ("bubble hash").

Holistic Health Group, Inc.
477 Wareham st
Middleborough, MA 02346
info@holistichealthgroup.org

PRODUCT CONSISTENCY

Each cannabis product, in its final form, will be analyzed and defined as having a specific concentration of total Tetrahydrocannabinol and total Cannabidiol and will have a consistent cannabinoid profile. The concentration of the following cannabinoids, at a minimum, will be reported:

1. Tetrahydrocannabinol(THC);

2. Tetrahydrocannabinolacid(THCA);

3. Tetrahydrocannabivarin(THCV);

4. Cannabidiol(CBD);

5. Cannabinadiolicacid(CBDA);

6. Cannabidivarin(CBDV);

7. Cannabinol(CBN);

8. Cannabigerol(CBG);

9. Cannabichromene(CBC);and

10. Any other cannabinoid component at > 0.1%

Holistic Health Group, Inc.
477 Wareham st
Middleborough, MA 02344
info@holistichealthgroup.org

Record Keeping procedures

HHG has developed and adopted procedures for maintaining records that conform to cannabis regulations and best practice for the cannabis and pharmaceutical sectors. HHG maintains a detailed description of plans, procedures and systems adopted and maintained for tracking, record keeping, record retention and surveillance systems, relating to all cannabis at every stage including cultivating, possession of cannabis, delivery, transporting, distributing, sale and dispensing by the proposed licensed organization and shall maintain records required for a period of five years and make these records available to the regulatory agency upon request.

HHG will ensure compliance with all laws and regulations pertaining to its operation as a licensed organization including recordkeeping. However, the operational needs of HHG necessitates records in excess of the mandated requirements. HHG's record keeping policies and procedures as detailed in this section and throughout the Standard Operating Procedures demonstrate not only compliance with legal and the CCC regulatory requirements, but a commitment to full documentation and transparency in all of HHG's operations.

HHG maintains strict control over records in order to provide operating data to management, information to advisors and board members, document operations for third- party certifiers or auditors and to maintain a record of operations in case of any insurance claims, legal or administrative investigation.

The Chief Operating Officer shall oversee all record retention protocols of HHG. The Chief Executive Officer is responsible for oversight of the Chief Operating Officer and all record maintenance activities. The HR Manager must supervise the recordkeeping activities in their operating unit to ensure compliance with HHG policies and procedures.

COMPLIANCE WITH REGULATIONS

HHG is committed to compliance with all laws and regulations pertaining to its operation as a registered organization. HHG will make it's all records available to the CCC or its authorized representatives upon request for monitoring, on-site inspection and audit purposes. Several regulations apply to recordkeeping functions. HHG's recordkeeping policies and procedures demonstrate not only compliance with the Massachusetts requirements but also a commitment to full documentation of HHG's operations.

HHG RECORD KEEPING REQUIREMENTS

The Chief Operating Officer with assistance from the Software Systems Analyst is responsible for recordkeeping, data retention and back-ups to ensure HHG maintains true, complete and accurate records. The Chief Operating Officer is also responsible for the proper integration of those requirements

into policies and procedures. Back-ups of all records must be maintained for a recommended of five years. All employees must adhere to recordkeeping policies and procedures unique to their department as a condition of employment. The Chief Operating Officer must authorize the release of any records to a third-party and must report the disclosure of records to the Chief Executive Officer to determine if legal counsel should be notified.

HHG shall maintain, at a minimum, the following categories of records for three years minimum:

1. Standard operating procedures;
2. Real time Inventory records including seed to sale tracking;
3. Confidential customer;

   a. Dispensing history.
4. All dispensed cannabis and periods of no-fill (zero report);
5. Dispensing errors;
6. Allergy and adverse event reporting
7. Cannabis recalls

Additional record requirements include:

- Employee records and policies;
- Waste disposal records;
- Maintenance records; and
- HHG's assets and liabilities;
- Fixed asset schedules;
- Insurance and escrow requirements;
- All monetary transactions;
- Books of accounts including journals, ledgers and supporting documents, agreements, checks, invoices, vouchers, monthly and quarterly reports and annual audits;
- Sales records;
- Salary and wages paid to each employee;

- Stipend paid to each executive manager and any executive compensation, bonus, benefit or item of value paid to any individual affiliated with HHG, including employees of HHG, if any; and
- All licensing documentation and other correspondence with the regulatory agency and all other corporate documents required by law including but not limited to meeting minutes, annual reports, stock or membership agreements.

RECORDKEEPING POLICIES

HHG has developed strict protocols for the maintenance of records and documents. In addition to HHG's legal obligation to protect customer information, HHG has a responsibility to its employees to accurately document the activities of the business. True and correct records maintained in a timely and organized manner also provides real-time operating information to management necessary to make quick and informed decisions in the normal course of business.

PRODUCT INVENTORY

Inventory records will be stored in accordance with CCC regulation 935 CMR 500.105(8) and 935 CMR 500.105(9). Inventory records will be held in the Office 365 SharePoint cloud environment and within the METRC software platform in accordance with CCC regulation 935 CMR 500.105(8)(e) and 935 CMR 500.105(9).

ORGANIZATIONAL CLOSURE

In the event of closure, HHG proposed to the regulatory agency the procedures and actions the registered organization shall take to maintain and make available to the regulatory agency all records required to be maintained under this part for a recommended period of five years.

PRICING RECORDS

The regulatory agency or an authorized representative has the right to examine records that formed the basis for the proposed price, including the registered organization's books, records, documents and other types of factual information that will permit an adequate evaluation of the proposed price. The licensed HHG shall provide reasonable access to the regulatory agency of its facilities, books and records.

RECORDKEEPING SYSTEMS EQUIPMENT

HHG will acquire multiple information point of sale systems requiring hardware and software. Whenever possible, HHG will elect cloud based software system that allow the use of standard hardware and that provide sufficient back-up capabilities. Hardware configurations are reviewed with each software application in order to determine what equipment will best meet the needs of the customer. HHG makes every effort to provide the most suitable desktop or laptop while maintaining HHG cost effectiveness. Employees will be given access to appropriate network printers. Employees needing computer hardware beyond that which is typically provided must request such hardware from their

General Manager. In some limited cases, employees may be given local printers if deemed necessary by the HR Manager in consultation with the Chief Operating Officer.

All software acquired or developed by HHG is and at all times shall remain HHG property and must be serviced by a real-time offsite backup system. All such software must be used in compliance with applicable licenses, notices, contracts and agreements. All purchasing of HHG software shall be centralized by the Chief Operating Officer to ensure that all applications conform to regulatory and HHG software standards and are purchased at the best possible price. All requests for software must be submitted to the General Manager for approval.

All financial data and records will be maintained in accordance with CCC regulation 935 CMR 500.105(9).

EMPLOYEE RECORDS ORGANIZATIONAL CHARTS AND JOB DESCRIPTIONS
The Chief Operating Officer or designee must maintain a current organizational chart and job descriptions for each employee and volunteer position.

EMPLOYEE RECORDS
The Chief Operating Officer or designee must maintain accurate employee records for each employee. Such records must be maintained for a recommended five years and include:

1. All materials submitted to the regulatory agency;

2. A copy of their regulatory agency issued licensing; Including background check documents which will be stored in accordance with 935 CMR 500.030.935 and 935 CMR 500.105(9)

3. Documentation of verification of references;

4. The **job description** or employment contract that includes a description of duties, authority, responsibilities, qualifications and supervision for each agent/employee;

5. Documentation of all training received by the employee and the signed statement of the employee indicating the date, time and place the training was received and the topics discussed, including:

a. The name and title of trainers; and

b. Documentation of periodic performance evaluations and a record of any disciplinary action taken.

6. Personnel record for each agent including policies and procedures

7. Staffing plan for facility hours and that will demonstrate accessible business hours and safe cultivation conditions

Holistic Health Group, Inc.
477 Wareham st
Middleborough, MA 02344
info@holistichealthgroup.org

COMPENSATION RECORDS
The Chief Operating Officer or designee must maintain records documenting the salary and wages paid to each employee, stipend paid to each executive manager and any executive compensation, bonus, benefit or item of value paid to any individual affiliated with HHG, including executive managers. These confidential records must be maintained for a recommended period of at least five years.

SECURITY RECORDS
The Security Officer must ensure 24 hours recordings from all video cameras are available for immediate viewing by the authorities in accordance with regulations. HHG policy is to retain these recordings for a minimum of 90 days or longer as necessary per regulatory agency regulations. The Chief Operating Officer in coordination with the Security Officer must ensure the proper retention of all recordings. Recordings shall not be destroyed or altered and shall be retained as long as necessary if the Chief Operating Officer is aware of a pending criminal, civil or administrative investigation or legal proceeding for which the recording may contain relevant information. All facilities will maintain all security system equipment and recordings in a secure location so as to prevent theft, loss, destruction or alterations. A current list of authorized employees and service personnel that have access to the surveillance room must be maintained and enforced by the Security Officer. Records of security tests must be maintained for five years and made available to the regulatory agency upon request.

THEFT AND LOSS
The Chief Operating Officer must ensure that all theft or loss reports originating from any department are reported to the appropriate law enforcement agency and the regulatory agency as required by regulations and fully documented in HHG's records. All related documentation must be available for review by the regulatory agency or other authorities upon legal request for a recommended period of at least five years or longer as required by regulations.

NOTIFICATION OF BREACH
The Chief Operating Officer in coordination with the Security Officer must ensure all security equipment is designed to provide immediate automatic or electronic notification to alert the local law enforcement agency of an unauthorized breach of security in any HHG facility. The Chief Operating Officer must ensure all employees are properly trained and directed to notify local law enforcement immediately upon discovering a breach of security.

MAINTENANCE RECORDS
HHG must maintain records of any maintenance, cleaning, sanitizing and inspection in any HHG facility. The Chief Operating Officer is responsible for oversight and maintenance of such records.

TRANSPORTATION RECORDS
At any time cannabis, cannabis waste or cannabis products are transported out of a HHG facility for any reason, there are policies that must be adhered to. All deliveries must be accompanied by a shipping

manifest. The shipping manifest must be verified as accurate by the Transportation and Dispensary Manager and provided by the Transportation and Dispensary Manager or transporting employee to the receiving location.

The transporting employee must record the end time of each trip and any variances occurring to the trip plan in the Transportation Event Log. Any vehicle accidents must be reported by the transporting employee to the transportation manager immediately.

Any loss or theft of cannabis must be reported by the transporting employee immediately to the Transportation Manager. Any manager receiving a loss or theft report from a

transporting employee must notify the Chief Operating Officer immediately. The Chief Operating Officer must report the occurrence to the appropriate law enforcement agency and the regulatory agency immediately.

The Chief Operating Officer must ensure transportation records are maintained in accordance with regulations and provided to the regulatory agency upon request.

PRODUCT DISPOSAL RECORDS
All waste composed of or containing cannabis at each dispensary, will be stored, secured and prepared for destruction in accordance with applicable CCC and local laws and regulations. All cannabis products marked for wasted will be ground up and mixed with an inert compound. All waste disposed of will be recorded in a Product Disposal Log, including the date of disposal; the type and quantity disposed of; the manner of disposal; the reason for disposal and the name of the customer who supplied the waste, if applicable. The Product Disposal Log will be saved for three years pursuant to CCC regulations 935 CMR 500.105(12)

LABORATORY RECORDS
Each HHG employee must ensure that no laboratory record presented by HHG is falsified in any manner. Any employee who knowingly falsifies a laboratory report will be terminated immediately. Any employee who suspects that a laboratory record may have been falsified must report to the HR Manager and Quality Control Manager immediately as a condition of employment.

MAINTENANCE RECORDS
Each Manager must maintain records of any maintenance, cleaning, sanitizing and inspection in any HHG facility. The General Manager is responsible for oversight and maintenance of such records.

TERMINATION OF OPERATIONS NOTIFICATION
If any department of HHG that requires licensing with the regulatory agency is closing for any reason, the HR Manager must ensure that the regulatory agency is notified in accordance with regulations. In the case of an emergency that requires a temporary cessation of operations, the General Manager must

notify the regulatory agency immediately for further direction and instruction on the appropriate procedures to undertake.

All activities must be appropriately documented and recorded by the HR Manager during any period of temporary or permanent closure. The Chief Executive Officer is responsible for the oversight of any temporary or permanent closure activities.

INTERNAL LABORATORY REPORTS

Each employee must ensure that no laboratory record presented by HHG is falsified in any manner. Any employee who knowingly falsifies a laboratory report will be terminated immediately. Any employee who suspects that a laboratory record may have been falsified must report to the Chief Operating Officer and Quality Control Manager immediately as a condition of employment.

The internal laboratory is required to maintain records for the following QA/QC/laboratory activities including sample receiving, tracking, storage and disposal; sample preparation, analysis and documentation; standards preparation, documentation, handling and storage; standards and chemical receiving, tracking, storage and disposal; instrument and equipment operation and maintenance; data collection, handling, reporting and storage; records pertinent to the quality of analytical data reported.; analyst training records; monthly and yearly safety inspections and emergency responses.

RECORDS INCIDENTS

Any loss or unauthorized alteration of HHG records discovered or suspected by any employee must be reported to the Chief Operating Officer immediately. The Chief Operating Officer must report such incidents to the regulatory agency and law enforcement as necessary. Upon discovery of a records security breach, the Chief Operating Officer must review all recordkeeping and security policies to identify deficiencies and necessary corrective measures. The Chief Operating Officer must engage the service of a third-party data security expert as needed.

INCIDENT REPORTING

Incident reporting must be documented by the Department Manager and reported immediately to the Chief Operating Officer or the Security Officer, in accordance with HHG reporting and notifications policies and procedures. Anyone with knowledge or a reasonable suspicion of an incident is instructed to make an immediate report to the Department Manager and record the Incident in the Incident Log. All incident activities, from receipt of the initial report through post-incident review, are to be documented. The Security Officer is responsible for ensuring all events are recorded, assembling these records in preparation and performance of the post-incident review and ensuring all records are preserved for review.

REPORTING OF RECORDS INCIDENTS

Any loss or unauthorized alteration of records at the dispensary related to cannabis, customers or employees will be reported to the Chief Operating Officer or Security Officer immediately. The Security

Officer will report any such incident to the Chief Operating Officer and the regulatory agency and law enforcement.

RECORDS MAINTENANCE
All electronic HHG records are recommended to be maintained for a minimum of five years. It is HHG policy to retain records in perpetuity unless a member of senior management determines the electronic record should be deleted or destroyed. The Quality Control Manager shall determine the need to destroy paper records.

ELECTRONIC RECORDS
HHG shall maintain all HHG records in an electronic format. A cloud based backup system will provide a second location for a duplicate copy of all records which will be in the Office 365 SharePoint environment. Independent laboratory records shall be maintained in METRC.

PAPER RECORDS
Quality control employee records may contain paper documents including training documentation forms. All human resources records will be maintained by administrative management and securely stored in accordance with all employment laws.

In accordance with CCC regulation 935 CMR 500.105(1) and 935 CMR 500.105(9) HHG will maintain and follow the following written operating procedures:

a) Security measures
b) Employee security polices
c) Marijuana retail dispensary hours of operation
d) Marijuana product storage
e) Marijuana strains and product mix
f) Accurate accounting and inventory
g) Quality control
h) Staffing plan and staffing records
i) Emergency procedures and disaster plan (fire, wind, flooding ect)
j) Alcohol, smoke and drug free workplace polices
k) Storage of confidential information
l) Termination of employee or agent
    - Product diversion
    - Unsafe work practices
    - Criminal history
m) Corporate hierarchy including board members and executives
n) Policies for handling cash
    - Storage

Holistic Health Group, Inc.
477 Wareham st
Middleborough, MA 02344
info@holistichealthgroup.org

- Transportation
- Collection frequency

o) Diversion prevention for minors
p) Energy efficiency

Holistic Health Group, Inc.
477 Wareham st
Middleborough, MA 02344
info@holistichealthgroup.org

Restricting Access to age 21 and older

HHG Inc., is committed to the responsible service of marijuana to responsible consumers by employees and registered agents who will be required to be 21 years or older

We are also committed to actions that will help reduce illegal purchasing and consumption. Accordingly, all employees are required to follow the procedures: No employee will serve any person under 21 years of age or to any person who is visibly intoxicated;

In order to be served all customers and visitors will be required to present documentation that shows them to be 21 years of age or older pursuant to CCC regulation 935 CMR 500.002.

If a customer is younger than 21 years old but older than 18 years old, they shall not be admitted unless they produce an active medical registration card issued by the CCC and proof of identification. If an individual is younger than 18 years old, they shall not be admitted unless they produce an active medical registration card **AND** they are accompanied by a personal caregiver with an active medical registration card and proof of identification. This HHG policy is pursuant to CCC regulation 935 CMR 500.140(3).

Acceptable documentation is a valid driver's license or passport with photo or photo identification, showing date of birth issued by a governmental body; The employee will check the identification to ascertain that it is authentic. The manager should be informed if there is any appearance of forgery or tampering; In the absence of authentic identification, or in case of doubt, the employee will refuse service to the customer; It is the employee's responsibility to notify a manager and or supervisor immediately when a customer shows visible signs of intoxication; After refusing service to any customer, employees will note the name, appearance and clothing of the individual involved. The information will be given to the Dispensary Manager and logged appropriately for future reference; No employee will "freely dispense". All products will be dispensed in measured quantities.

In order for each employee to feel comfortable and confident with the above procedures, all employees who dispense cannabis will participate in a designated marijuana dispensing/handling awareness-training program at the beginning of employment. Additionally, employees will be required to complete, at minimum, annual marijuana dispensing awareness training; supplementary trainings will be scheduled accordingly in the event of a policy/procedure change or an update to the laws and regulations surrounding the Adult-Use Marijuana program.

Holistic Health Group, Inc.
477 Wareham st
Middleborough, MA 02344
info@holistichealthgroup.org

QUALIFICATIONS AND TRAINING

The HR Manager must ensure that all employees receive proper training and education regarding the healing and medicinal benefits cannabis provides. Pursuant to CCC regulations 935 CMR 500.105(2) all HHG employees will be required to receive at least 8 hours of ongoing training annually.

RESPONSIBLE VENDOR TRAINING

All HHG employees, owners and board members will be required to take the Responsible Vendor Program when available via the CCC. Upon successfully completing the responsible vendor program HHG will be designated a "responsible vendor."

Once HHG is designated a "responsible vendor," all new employees involved in the handling and sale of marijuana for adult use shall successfully complete the responsible vendor program within 90 days of hire. After initial successful completion of a responsible vendor program, each owner, manager, and employee involved in the handling and sale of marijuana for adult use shall successfully complete the program once every year thereafter to maintain designation as a "responsible vendor."

Administrative employees who do not handle or sell marijuana may take the "responsible vendor" program on a voluntary basis. HHG will maintain records of responsible vendor training program compliance for four years and make them available for inspection by the CCC and any other applicable licensing authority upon request during normal business hours.

DISPENSARY EMPLOYEE TRAINING REQUIREMENTS

The Dispensary Manager must ensure that prior to beginning work in the dispensary, each employee will receive full training on different strains of cannabis, different methods of using cannabis, edible cannabis products and infused cannabis products and how to recognize signs of substance abuse or instability.

TRAINING CHECKLIST

The Dispensary Manager must ensure that prior to beginning work in the dispensary, each employee will receive full training on understanding the difference between topical products, edible cannabis products and cannabis-infused products, as applicable to the operations of facility; procedures used by HHG for the production of edible cannabis products or cannabis- infused products. Training will include the proper procedures for handling edible cannabis products or cannabis-infused products, including the procedures to prepare, produce, package and store such products in accordance with the regulatory agency regulations.

Holistic Health Group, Inc.
477 Wareham st
Middleborough, MA 02344
info@holistichealthgroup.org

DISPENSARY EMPLOYEE TRAINING AND EDUCATION
Educating initial, business start-up employees will include a two-four-week training program including but, not limited to: the Operation and Management Practices Plan (an edited version for all employees); regulatory agency regulations for dispensary operations; security procedures; cannabis education; the FolioGrow/Greenbits point of sale system; METRC software system; electronic verification procedures; the debilitating conditions identified in the Act; and point of sale software training.

Finally, the Dispensary Manager will lead formal on-the-job training at the dispensary and each employee will receive a certification once the training course is complete. Future employees will receive the same materials and reading requirements, but their on-the-job training will include shadowing an exemplary employee for the first week of their employment. Throughout employment, employees will participate in educational HHG meetings with alternating topics and educational seminars regarding cannabis research. Cannabis medical consultants will undergo weekly tests on current offerings at the dispensary. Training course topics include but are not limited to:

PATIENT CONFIDENTIALITY REQUIREMENTS
Educational materials explaining HIPAA's rules for the confidentiality of patient information will be provided via a combination of internal and responsible vendor training

FIT FOR USE
Dispensary Manager will teach employees to sell fit-for-use cannabis products: cannabis products designed and created with specific customer conditions in mind. Topics include cannabinoids, methods of administration, dosages, strains and each product available for sale at the dispensary.

REGULATORY INSPECTION PREPAREDNESS AND LAW-ENFORCEMENT INTERACTION All employees will be informed on how to prepare for inspections by the regulatory agency representatives and how to document and report any loss or theft of cannabis from the dispensary to the appropriate regulatory agency.

SECURITY PROCEDURES
Instruction on the use of the security key cards and the electronic, access-controlled doors; the locations of surveillance cameras; opening and closing procedures; regulatory agency security regulations; the locations of silent alarms; procedures regarding restricted and limited access areas.

EMERGENCY RESPONSE
A copy of the HHG’s emergency response plan for crises that could affect the security or operation of the dispensary in the event of strike, fire, flood or other natural disaster or other situations of local, State or national emergency. Instruction on the locations of all the hardwired, emergency-police call devices; the locations of the phone lists with all the emergency-response numbers, including fire, law enforcement and the executive team.

Holistic Health Group, Inc.
477 Wareham st
Middleborough, MA 02344
info@holistichealthgroup.org

DISPENSARY JOB DESCRIPTIONS

HHG will ensure there are measures in place to promote a welcoming environment for customers. Employees must adhere to a professional dress code. Employees will offer complimentary educational collateral with every purchase and will ask if the consultation room is preferred for customer privacy.

Employees may not use mobile phones while they are on the clock and when off the clock they may not be in the dispensing room or lobby but remain instead in the break room. There will be no food or drink outside of break room, no open communications with security staff, co-workers or management while on the dispensary floor. Employees must not wear overly fragrant perfumes or lotions. All Employees are required to sign a patient confidentiality agreement which is a commitment to protecting patient information.

QUALITIES DESIRED - CUSTOMER COORDINATOR AND DISPENSARY EMPLOYEE

Empathy; previous experience in cannabis or healthcare preferred; accurate data-entry and record keeping; strong attention to detail; superior customer service skills; excellent communication skills; able to handle emergencies and make sound decisions; proficiency in windows-based software and internet navigation; and knowledge of cannabis policy and law.

DISPENSARY MANAGER

Responsible for day-to-day dispensary operations, manages all employees, employee training, monitors inventory and reports any loss or irregularities.

ASSISTANT MANAGER

Works with the Dispensary Manager to ensure dispensary operations are successful and compliant.

SECURITY RECEPTIONIST

Gatekeeper to the dispensary. Verifies customers. Responsible for regulating the flow of customers to the limited access area.

COMPLIANCE OFFICER

Ensures that the dispensary is compliant will all State regulations.

DISPENSARY STAFF REQUIRED DURING HOURS OF OPERATION

Dispensary will have a minimum of six staff members scheduled during operating hours. At least one member of the HHG security department will be onsite at all times the facility is operating.

Holistic Health Group, Inc.
477 Wareham st
Middleborough, MA 02344
info@holistichealthgroup.org

HHG's Plan for Separating Medical from Recreational Operations

Holistic Health Group has obtained host agreements from the town of Middleborough to conduct vertical Cannabis production and sales operations in both adult use and medical markets. HHG's cultivation and processing center will track each plant pursuant to production allowances separately, and reserved from seed through sale in either one, or the other market. HHG may, from time to time, request from the Cannabis Control Commission in a form provided by the Commission, the transfer of product from adult use to medical markets, or the reverse. HHG's dispensary will therefore serve both qualified medical patients and customers over the age of 21, pursuant to Cannabis Control Commission (CCC) regulations at 935 CMR 502 et. Seq. Concerning co-located marijuana operations.

CULTIVATION & PRODUCTION PROCEDURES

HHG will identify and track all plants slated for either the adult use, or medical, markets from immaturity through harvest pursuant to CCC regulations at 935 CMR 502.120 & 500.120, including waste and production, and complying will all seed to sale requirements through the processing and manufacturing operations. All tracking of medical and adult use products, plants, and waste will be done within METRC.

At the point of initial production, HHG will also comply with 935 CMR 501.105(3) concerning handling, testing and production of MIPs; as well as with 935 CMR 500.130 concerning seed to sale procedures, and additional requirements for product manufacturers.

Medical MIPs will be packaged appropriately and kept separately from Adult Use MIPs, and all MIPs will comply with packaging, labeling and dosage requirements under CCC regulations at 935 CMR 500.150.

DISPENSARY DESIGN

HHG has designed its dispensary to include dedicated access for medical marijuana patients to ensure better patient access to its products. Design elements include designated patient and handicapped parking close to dispensary entrance and exit points, and multiple exclusive medical point of sale terminal within the dispensary. The dispensary design will include separate lines for sales of medical and adult-use marijuana. Medical patients and caregivers will be able to use both lines pursuant to CCC regulation 935 CMR 502.140. The dispensary will create literature to explain basic and advanced information about Cannabis, as well as provide traditional dosage and use examples.

Holistic Health Group, Inc.
477 Wareham st
Middleborough, MA 02344
info@holistichealthgroup.org

A qualified agent of HHG will be on staff at all hours when the dispensary is open, to provide information about Cannabis and its therapeutic uses. HHG's dispensary also includes a private consultation room separate from the retail floor in the event a patient requires a one-on-one discussion.

Medical patients and caregivers will have priority access for initial check in and identification verification by allowing them to schedule their appointments and time of entry. HHG will also have 2 check-in lines specifically marked for medical and adult-use. The medical customers will be in a priority check-in line. HHG will make an effort to prioritize access to the medical community pursuant to CCC regulation 935 CMR 502.140.

DISPENSARY PROCEDURES

HHG will at all times comply with dispensary operation procedures under Cannabis Control Commission regulations at 935 CMR 502.140, including but not limited to:

1. Verification of age and patient registration status for all patrons and customers.
2. Sales limitations, sales refusals, and recording sales.
3. Continued separate tracking and physical separation of Cannabis and MIPs designated for either medical or adult use.
4. Consumer & Patient Education

PATIENT SUPPLY

All products will be tested by an independent testing laboratory in accordance with CCC regulations at 935 CMR 500.105(8)(c), pursuant to standards required under Section 500.160, and HHG will at all times beginning 6 months after sales operations commence, maintain a quantity and variety of marijuana products for patients sufficient to meet patient demand pursuant to its recorded sales.

HHG will track product types and strains sold to patients, and shall report to the CCC upon request such data over each preceding 6 month period. HHG will also submit quarterly and upon the request of the CCC, its inventory plan including quantities and varieties reserved for medical patients. Patient supply audits will be conducted weekly and retained for a period of at least 6 months. HHG shall maintain and provide on a biannual basis accurate sales data that has been collected during the 6 months for the purpose of ensuring adequate supply of marijuana under 935 CMR 500.140(10), 935 CMR 502.140. Also

Holistic Health Group, Inc.
477 Wareham st
Middleborough, MA 02344
info@holistichealthgroup.org

during the initial 6 months of operation HHG will reserve 35% of the marijuana products pursuant to CCC regulation 935 CMR 502.140.

The marijuana products that are reserved for medical patient supply will reflect the actual types, and strains of marijuana products available and documented during the prior 6 months. If a strain or product is no longer available a substitution will be made that reflects the type and strain no longer available as closely as possible pursuant to CCC regulations 935 CMR 502.140.

HHG will comply with any and all actions taken by the CCC with respect to compliance, inspections, and if necessary deficiency statements and plans of action.

New England Engineering
Building Systems & Commissioning Engineers

Massachusetts State
Cannabis Control Commission
Union Station, 2 Washington Square
Worcester, MA 01604

June 30, 2021

Subject: Regulatory Compliance for Frankie Investments, 447 Wareham St, Middleborough, MA

Dear Commissioner,

Frankie Investments located at 447 Wareham St, Middleborough, MA 02346 is facility composed of 14,450 Square Feet (SF) of Greenhouse Horticultural areas, 5,000 SF of Horticultural Grow areas, 3,250 SF of plant processing areas, and 8,600 SF of office and operations support areas.

Pursuant to 935 CMR 500.120:

1. Lighting: The Greenhouse and Horticultural area Tier 1 canopies (germination, cloning/mother plants, propagation, vegetation, flowering, and harvest) consisting of HLSF=14,158.5 SF have HLE=383,600W of LED and High Pressure Sodium for a total light power density of HLPD=27.09 W/SF which is under the Tier 1 36 W/SF limit by almost 25%:

	Fixture Watts	Total Fixtures	Total Watts	Bench Size Sq.'	Number of Benches	Total Canopy Sq.'	Average Watts	
Flower Room #1	1200	30	36000	182.5	9	1642.5	21.92	1200 Watt LED
Flower Room #2	1200	36	43200	182.5	11	2007.5	21.52	1200 Watt LED
Flower Room #3	1200	30	36000	182.5	9	1642.5	21.92	1200 Watt LED
Flower Room #4	1100	64	70400	182.5	11	2007.5	35.07	1100 Watt H.P.S. Lights
Flower Room #5	1200	30	36000	182.5	9	1642.5	21.92	1200 Watt LED
Veg. Room	600	198	118800	32	99	3168	37.50	Mammouth MF06DK
Mother/Clone Rm.	300	112	33600	32	56	1792	18.75	TSR HVR-4Q
Mother/ Clone	600	16	9600	32	8	256	37.50	Mammouth MF06DK
TOTALS			383600			14158.5	27.09	

See Attachment A for HLE cut sheets.

30 Turnpike Road • Suite #1 • Southborough MA 01772 • (508) 485-4633 • FAX: (508) 485-1830
www.neecorp.com

2. HVAC & Dehumidification Systems:

    a. Greenhouses (Flower Rooms 1 thru 5) have evaporative water cooling and boiler hot water heating. Natural sunlight controlled with solar shades is used when available. Very large draw through evaporative cooling Prospiant AL54M fans also provide ventilation and odor dilution air. There is no refrigeration cooling used for the Greenhouses.

    b. Horticultural area Mother, Veg, and Dry rooms use four pipe fan coils supplied with chilled water from a 100-Ton Carrier 30RB100 air cooled chiller, see Attachment B1 and hot water from a Raypak Model 1505 high-efficiency boiler backed up by a Raypak Model 1529B 1530MBH input propane boiler, see Attachment B2. The Chiller and Boilers meet MA State Mechanical, Energy and Building Code requirements.

    c. The Horticultural area Mother, Veg, and Dry Rooms use four pipe fan coils provide dehumidification. The Mother and Veg rooms have twelve (12) (4-Ton/Each Nominal Cooling) 2.2 Ton Latent Cooling /Each DeltaCool SGHOH-030B fan coils for 26.3-Tons of dehumidification, see Attachment C1. The Four (4) Dry Rooms have a SDI LAA-4601-1W 2.5-Ton/Each latent cooling for another 10-Tons of dehumidification, see Attachment C2. Total installed dehumidification (latent cooling) capacity is 36.3 Tons of latent cooling. The fan coils meet MA State Mechanical, Energy and Building Code requirements.

    d. There is no energy recovery used in the facility, however there is substantial energy avoidance by using natural sunlight in the greenhouse areas.

    e. Odor avoidance is achieved by large quantities of dilution air that is part of the evaporative cooling process. There are thirteen (13) Prospiant AL54M fans rated at over 20,000CFM at 0.15”water column SP each or 260,000CFM total of fresh air which dilutes any odors produced by the plants. See Attachment E.

The horticultural area HVAC and dehumidification systems meet the Massachusetts State Building Code, and that HVAC and dehumidification equipment have been evaluated and sized for the loads of the facility. Greenhouses are exempt from MA State Building Energy Code thermal envelope requirements. The Horticultural area Mother, Veg and Dry Rooms served by the 100-Ton Air Cooled Chiller have R-21 walls and R-49 roofs that exceed the thermal envelope requirements of the MA State Building Energy Code.

Sincerely,

John Kitsalis, PE
LEED Accredited Professional

COMMONWEALTH OF MASSACHUSETTS
JOHN P. KITSALIS
ELECTRICAL
No. 40646
REGISTERED PROFESSIONAL ENGINEER

COMMONWEALTH OF MASSACHUSETTS
JOHN P. KITSALIS
MECHANICAL
No. 42781
REGISTERED PROFESSIONAL ENGINEER

30 Turnpike Road • Suite #1 • Southborough MA 01772 • (508) 485-4633 • FAX: (508) 485-1830
www.neecorp.com

P.L. LIGHT SYSTEMS

THE LIGHTING KNOWLEDGE COMPANY

T: 905.563.4133
Toll Free: 1.800.263.0213
F: 905.563.0445
www.pllight.com

FIXTURE	PLX (High Pressure Sodium)
Project	
Notes	

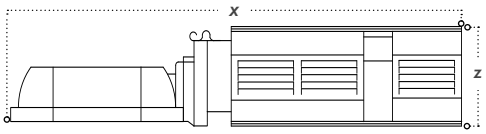

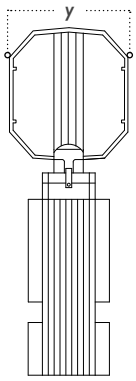

DIMENSIONS

	Delta/Zeta	Maxima	Wide	Super Wide
x = length	30 in. (76.2cm)	35.25 in. (89.5cm)	30 in. (76.2cm)	29.75 in. (75.6cm)
y = width	9.84 in. (25.0cm)	12.75 in. (32.4cm)	16.5 in. (41.9cm)	15.5 in. (39.4cm)
z = height	5.25 in. (13.3cm)	6.5 in. (16.4cm)	5.25 in. (13.3cm)	5.25 in. (13.3cm)

weight	**400W** 24.25lb (11kg)	**600W** 33.07lb (15kg)	**1,000W** 37.48lb (17kg)

TECHNICAL SPECIFICATIONS†

	400W						600W						1,000W					
RATED MAIN VOLTAGE	120V	208V	240V	277V	347V	480V	120V	208V	240V	277V	347V	480V	120V	208V	240V	277V	347V	480V
Input Current	4.2A	2.4A	2.1A	1.7A	1.3A	1.0A	9.5A	5.5A	4.8A	4.2A	3.3A	2.3A	9.5A	5.5A	4.8A	4.2A	3.3A	2.3A
Power Factor	>0.9						>0.9						>0.9					
Input Frequency	60Hz						60Hz						60Hz					
Actual Input Power	465W						675W						1,100W					
Lamp Type	High Pressure Sodium 1,000W 400V Electronic																	

†*Accurate to ± 10%*

SPECIFICATION

1. FIXTURE	2. FIXTURE WATTAGE	3. VOLTAGE	4. LIGHT SOURCE	5. REFLECTOR	6. CORD / PLUG	7. MOUNTING
PLX (HPS)	400 Watts 600 Watts 1,000 Watts	120V 208V 240V 277V 347V 480V	400W Philips HPS SONT 600W Philips HPS SONT 1,000W Philips HPS ALTO 1,000W USHIO HPS OPTI-BLUE* **MH Conversion Lamp*	Wide (400W) Super Wide (400W) Delta (400W / 600W) Zeta (400W / 600W) Maxima (1,000W)	Consult Factory	Std Track/Truss Bracket Custom Bracket Perpendicular Bracket Track Perpendicular Bracket Track

Warranty Terms: Fixtures warrantied for two (2) years; ballast two (1) years; lamps one (1) year.

All rights reserved.
© P.L. Light Systems

Due to continuous product improvements, specifications and dimensions are subject to change without notice. Certain options have limited compatibility with some other product selections. Consult www.pllight.com for most current technical information.

ATTACHMENT A

06i

1200W

Fixture Datasheet

FōHSE™

FUTURE OF HORTICULTURAL SCIENCE + ENGINEERING

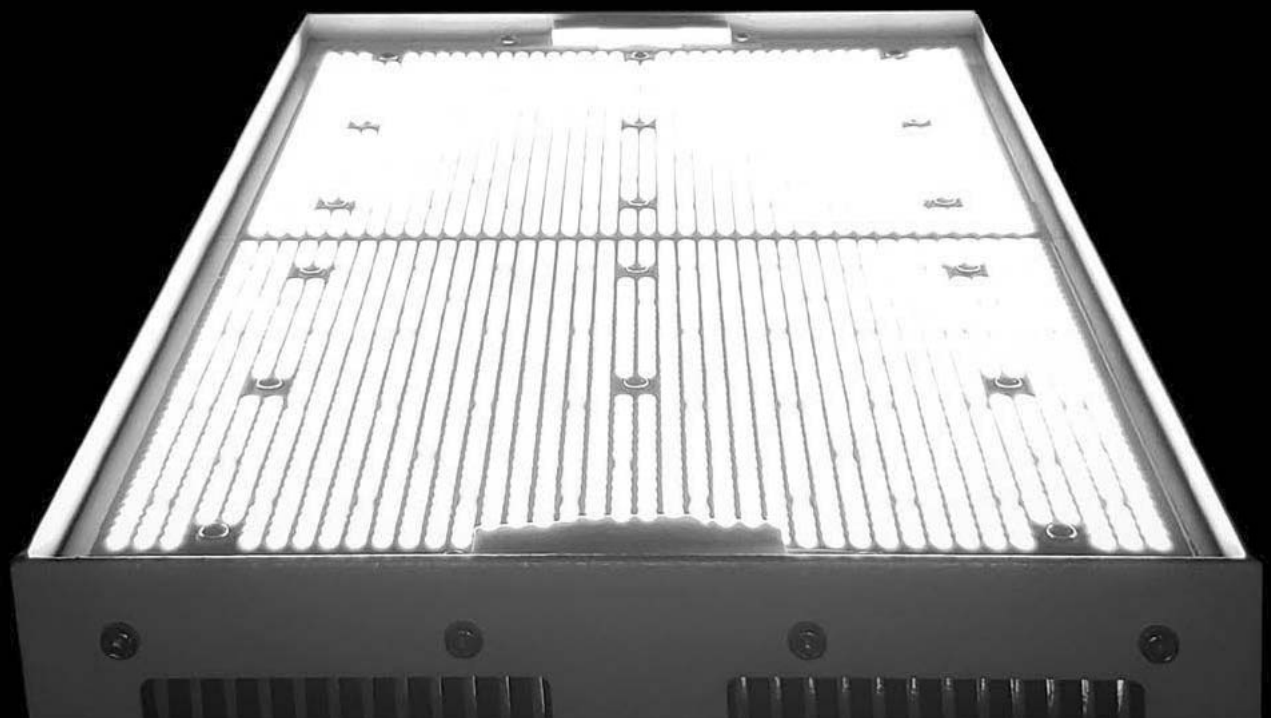

FOHSE™ 06i

Fixture Datasheet

WEIGHT

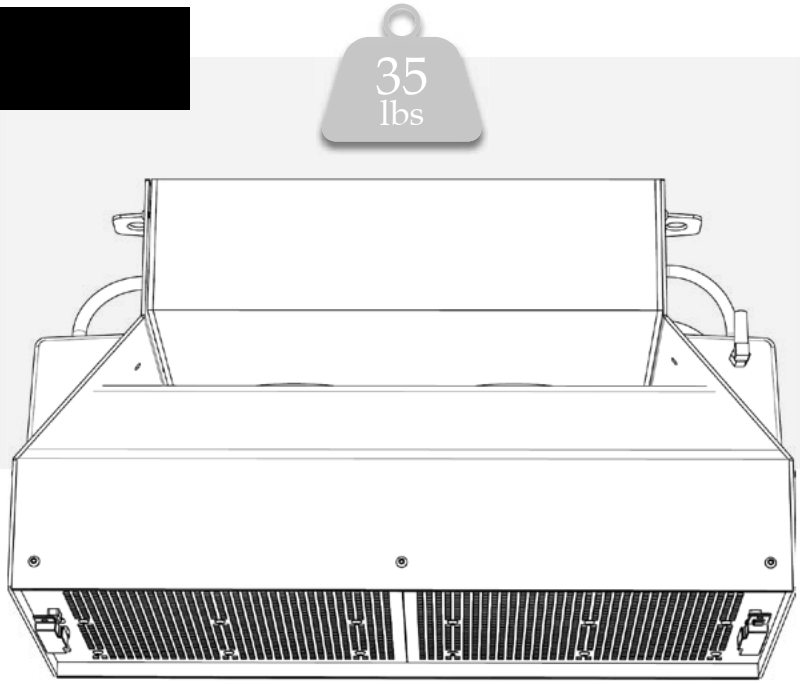

DIMENSIONS

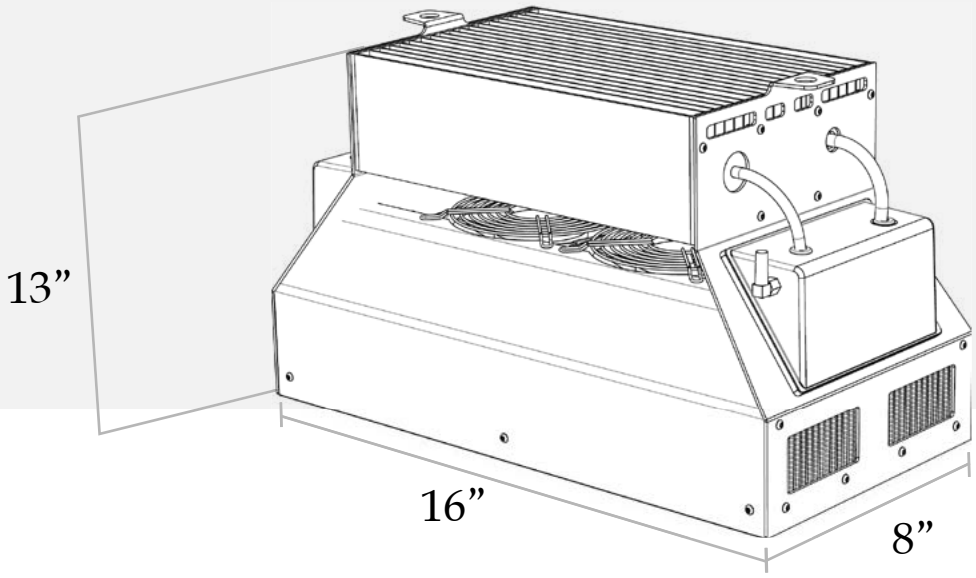

INSTALLATION, OPTION A

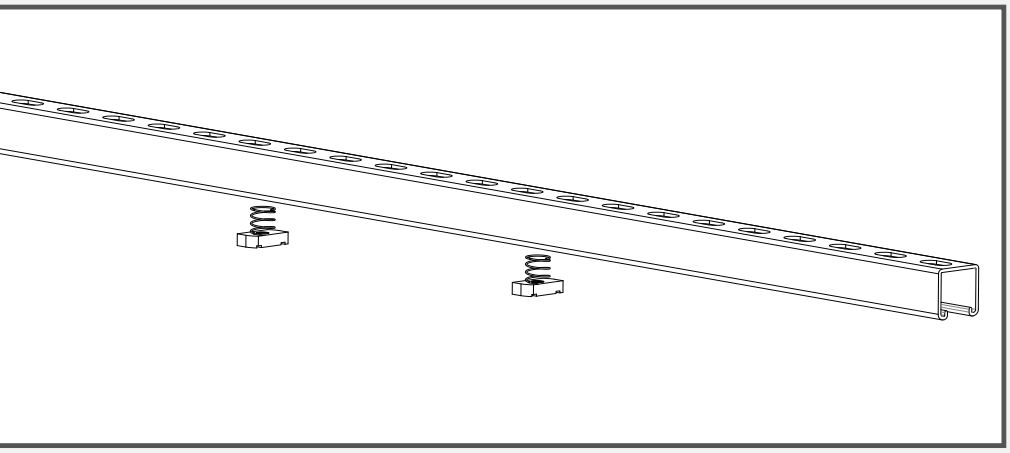

First, position two spring nuts inside your unistrut channel

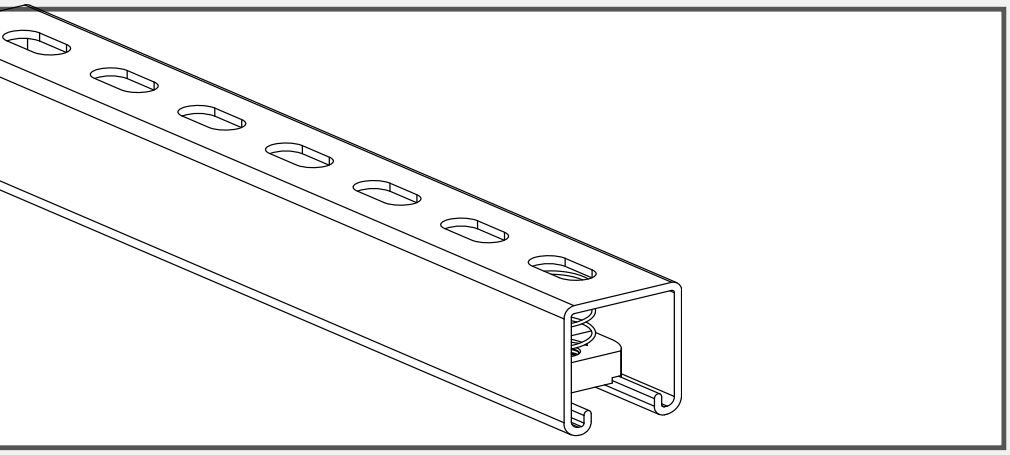

Ensure the 'teeth' of the spring nuts are positioned over the interior lip of the unistrut channel

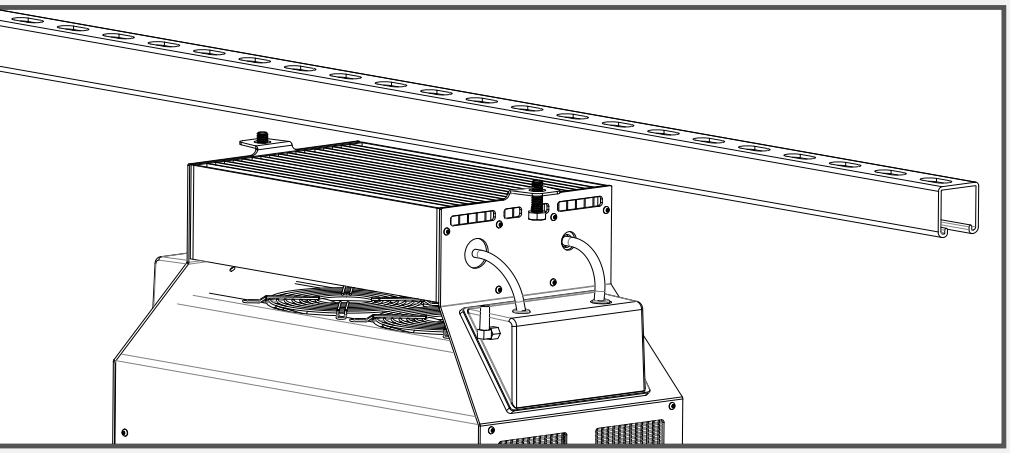

Thread two bolts into the two mounting holes at the top of the O6i

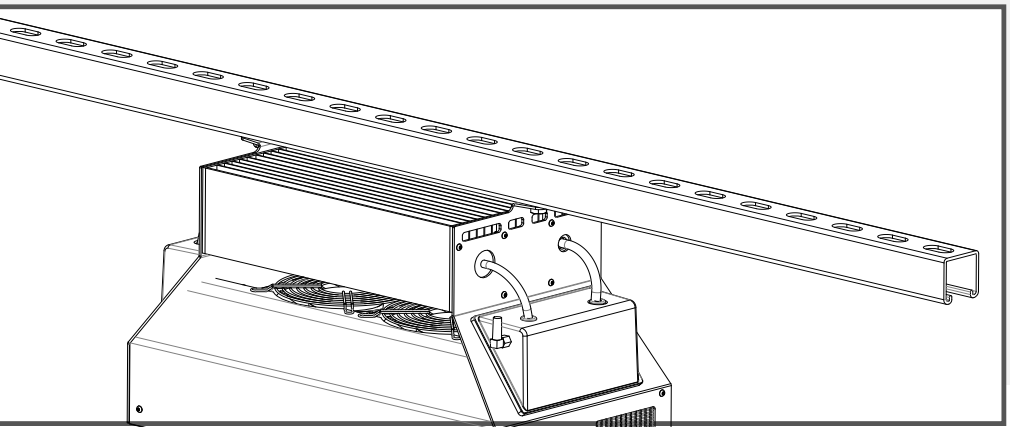

Secure the bolts into the spring nuts until the O6i is fastened securely to the unistrut.

INSTALLATION, OPTION B

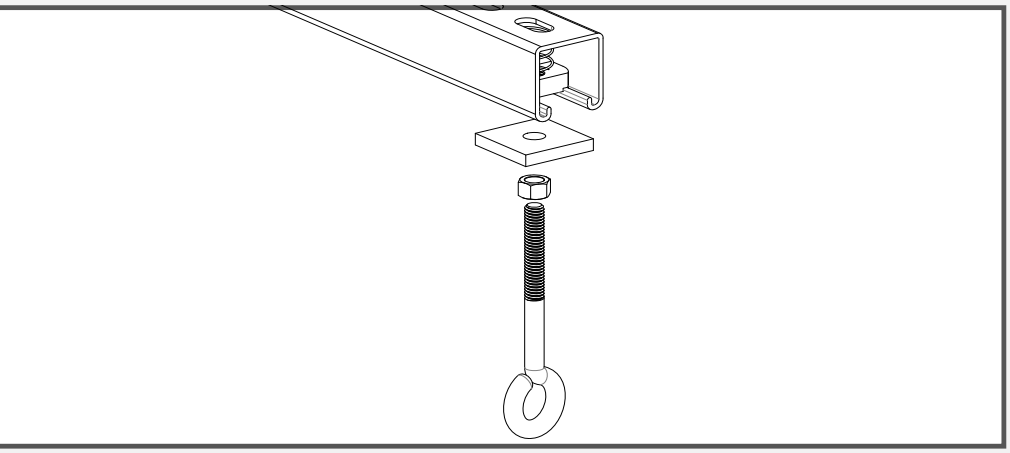

Position an eyebolt, matching nut, square washer plate, and spring nut under the unistrut channel as pictured.

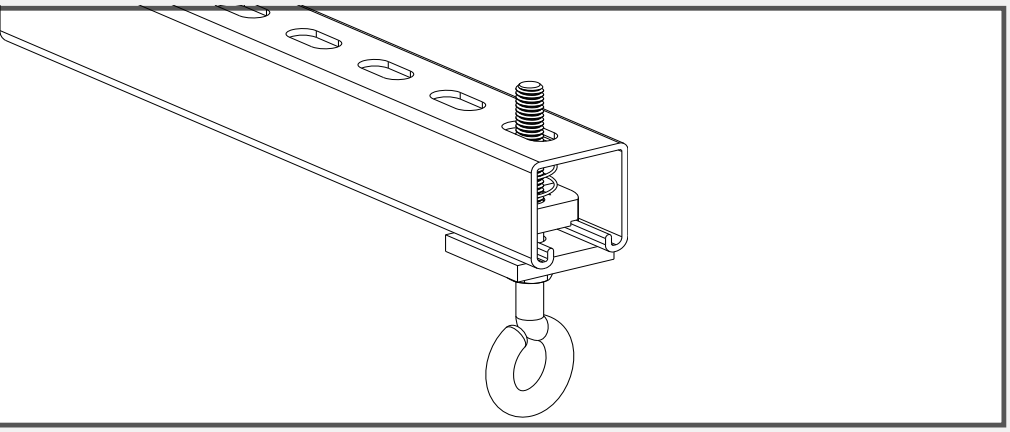

Fasten everything securely and repeat for every O6i unit you plan to hang.

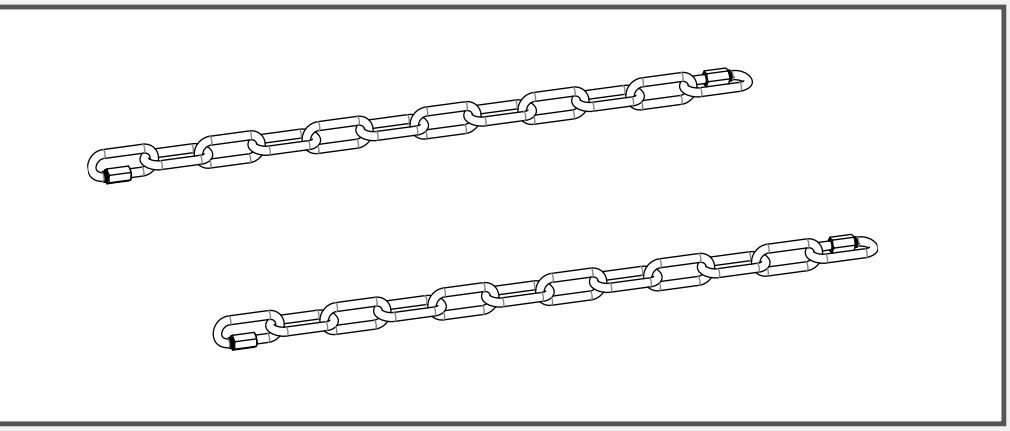

Cut two lengths of chain to desired length and hook two 'quicklinks' on either end of the chain.

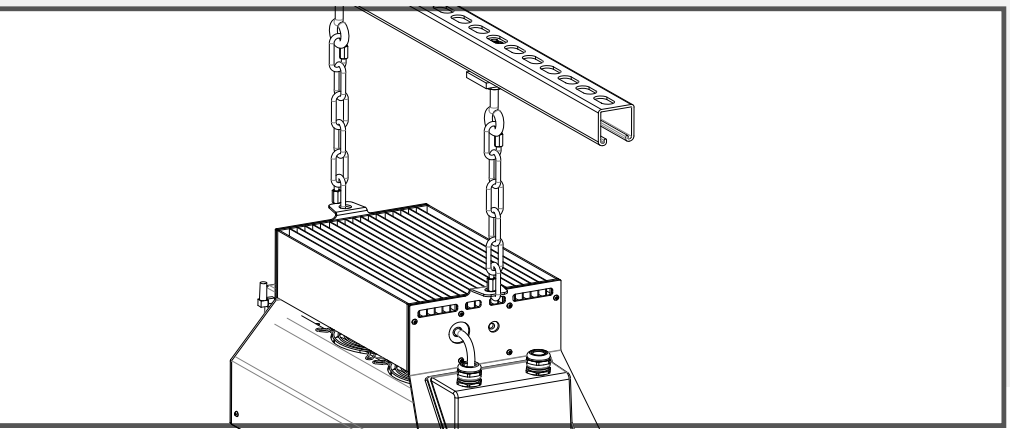

Hook one end of the quicklink chain into the eyebolt and secure. Then hook the other end into the mounting holes on the O6i to secure.

PLUG TYPES

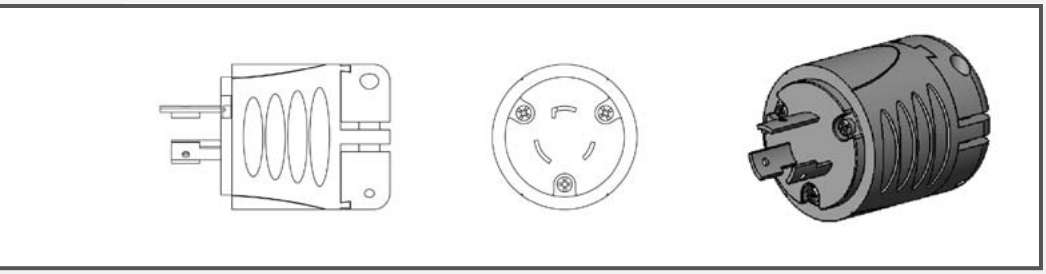

L6-20 plug
for up to 250vac

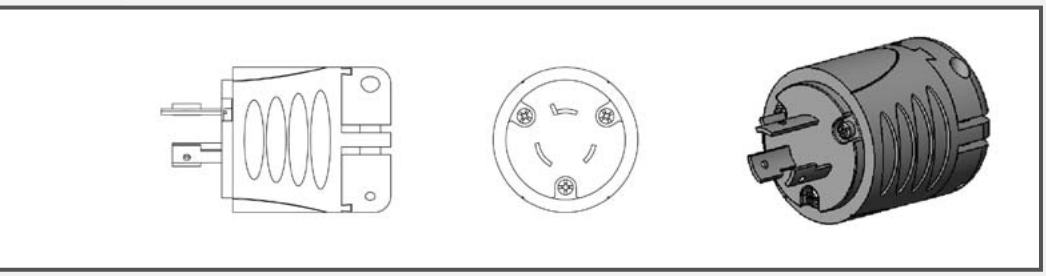

L7-20 plug
for up to 277vac

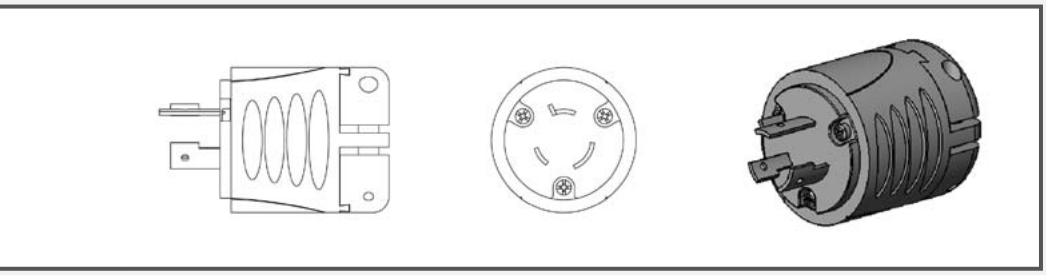

L8-20 plug
for up to 480vac

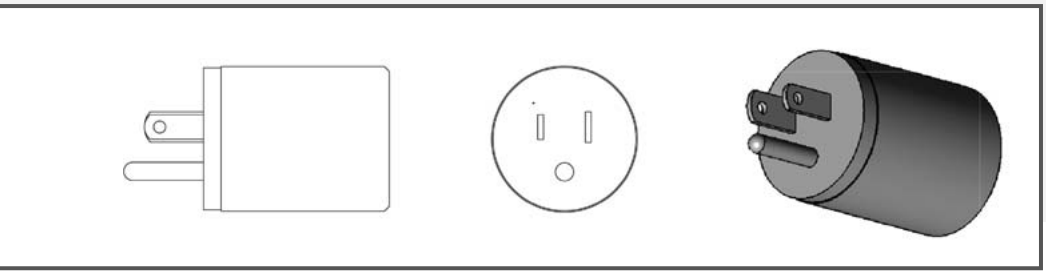

5-15 plug
for up to 120vac

CONNECTIVITY

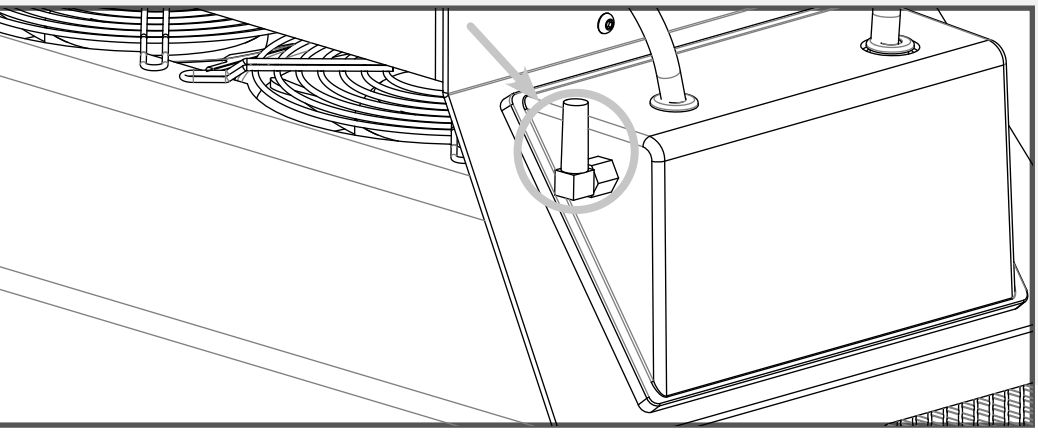

The O6i wirelessly communicates with your controller. No cables required.

P.L. LIGHT SYSTEMS

THE LIGHTING KNOWLEDGE COMPANY

T: 905.563.4133
Toll Free: 1.800.263.0213
F: 905.563.0445
www.pllight.com

FIXTURE	PLX (Metal Halide)
Project	
Notes	

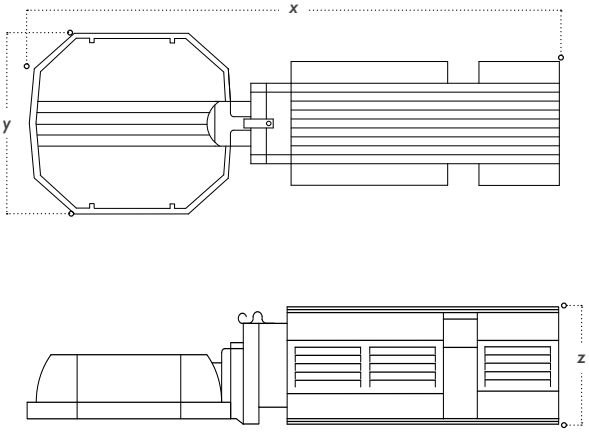

DIMENSIONS

	Delta/Zeta Reflector	Maxima Reflector
x = length	30 in. (76.2cm)	35.25 in. (89.5cm)
y = width	9.84 in. (25.0cm)	12.75 in. (32.4cm)
z = height	5.25 in. (13.3cm)	7.25 in. (18.4cm)
weight	**400W** 24.25lb (11kg)	**1,000W** 37.48lb (17kg)

TECHNICAL SPECIFICATIONS†

	400W						1,000W					
RATED MAIN VOLTAGE	120V	208V	240V	277V	347V	480V	120V	208V	240V	277V	347V	480V
Input Current	4.2A	2.4A	2.1A	1.7A	1.3A	1.0A	9.5A	5.5A	4.8A	4.2A	3.3A	2.3A
Power Factor	>0.9						>0.9					
Input Frequency	60Hz						60Hz					
Actual Input Power	465W						1,100W					
Lamp Type	Metal Halide 1,000W 400V Electronic											

†*Accurate to ± 10%*

SPECIFICATION

1. FIXTURE	2. FIXTURE WATTAGE	3. VOLTAGE	4. LIGHT SOURCE	5. REFLECTOR	6. CORD / PLUG	7. MOUNTING
PLX (MH)	400 Watts 1,000 Watts	120V 208V 240V 277V 347V 480V	400W Philips MH HPIT 1,000W Philips MH STD	Delta (400W) Zeta (400W) Maxima (1,000W)	Consult Factory	Std Track/Truss Bracket Custom Bracket Perpendicular Bracket Track Perpendicular Bracket Track

Warranty Terms: Fixtures warrantied for two (2) years; ballast two (1) years; lamps one (1) year.

All rights reserved.
© P.L. Light Systems

Due to continuous product improvements, specifications and dimensions are subject to change without notice. Certain options have limited compatibility with some other product selections. Consult www.pllight.com for most current technical information.

TSRgrow™

TG-100 SERIES

TG100-R3
Vegetable - 3 bar set-up

TG100-R6
Flowering - 6 bar set-up

Veg Delight Spectrum Curve

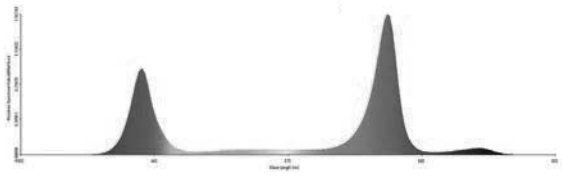

Flower Power Spectrum Curve

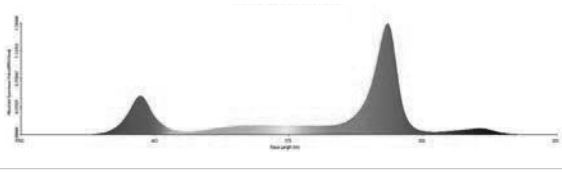

White Lightning Spectrum Curve

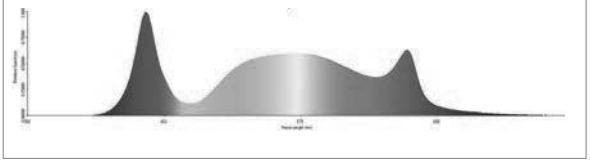

	TG100-R3	TG100-R6
Spectrum	V, F, W	V, F, W
Efficacy	2.5 µmol/J	2.5 µmol/J
PPFD/PPF	700/750 µmol/s	1400/1500 µmol/s
Input Power	315 W	630 W
Input Voltage*	100-277 V*	100-277 V*
Dimensions - Bar	3 in x 45 in x 1.5 in	3 in x 45 in x 1.5 in
Weight - Bar/Fixture	4.5 lbs / 25 lbs	4.5 lbs / 40 lbs
Mounting Height	8 in - 16 in	6 in - 10 in
Thermal Management	Passive	Passive
Dimming	0-10 V	0-10 V
Operating Temp	-20°C ~ 40°C	-20°C ~ 40°C
Power Factor	>0.95	>0.95
Supply Frequency	50/60 Hz	50/60 Hz
Heat Output	1075 BTU/hr	2150 BTU/hr
Warranty	3-5 years	3-5 years

*additional input options available

DIMENSIONS

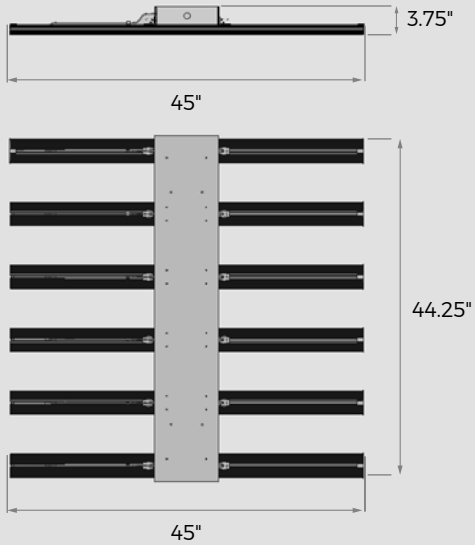

Lights are modular and brackets are available to let you customize configurations to suit your growing needs.

ORDERING INFORMATION

Model	Spectrum	Mounting	Bars	Plug
TG100	**V** Veg	**R** Rack	**3** bars	**N5** NEMA 5-15P
TG100HV	**F** Flower		**6** bars	**N6** NEMA 6-15P
	W White			

order example: TG100-F-R6-N5

TSRGrow, LLC. | 60 Alhambra Rd, Suite 1 Warwick, RI 02886 | tsrgrow.com | info@tsrgrow.com

© copyright 2018 TSRgrow, LLC. Specifications subject to change without notice.

FŌHSE™

FUTURE OF HORTICULTURAL

O6i LIGHT PLAN FOR HOLISTIC HEALTH GROUP
GREENHOUSE 60’x41.5’

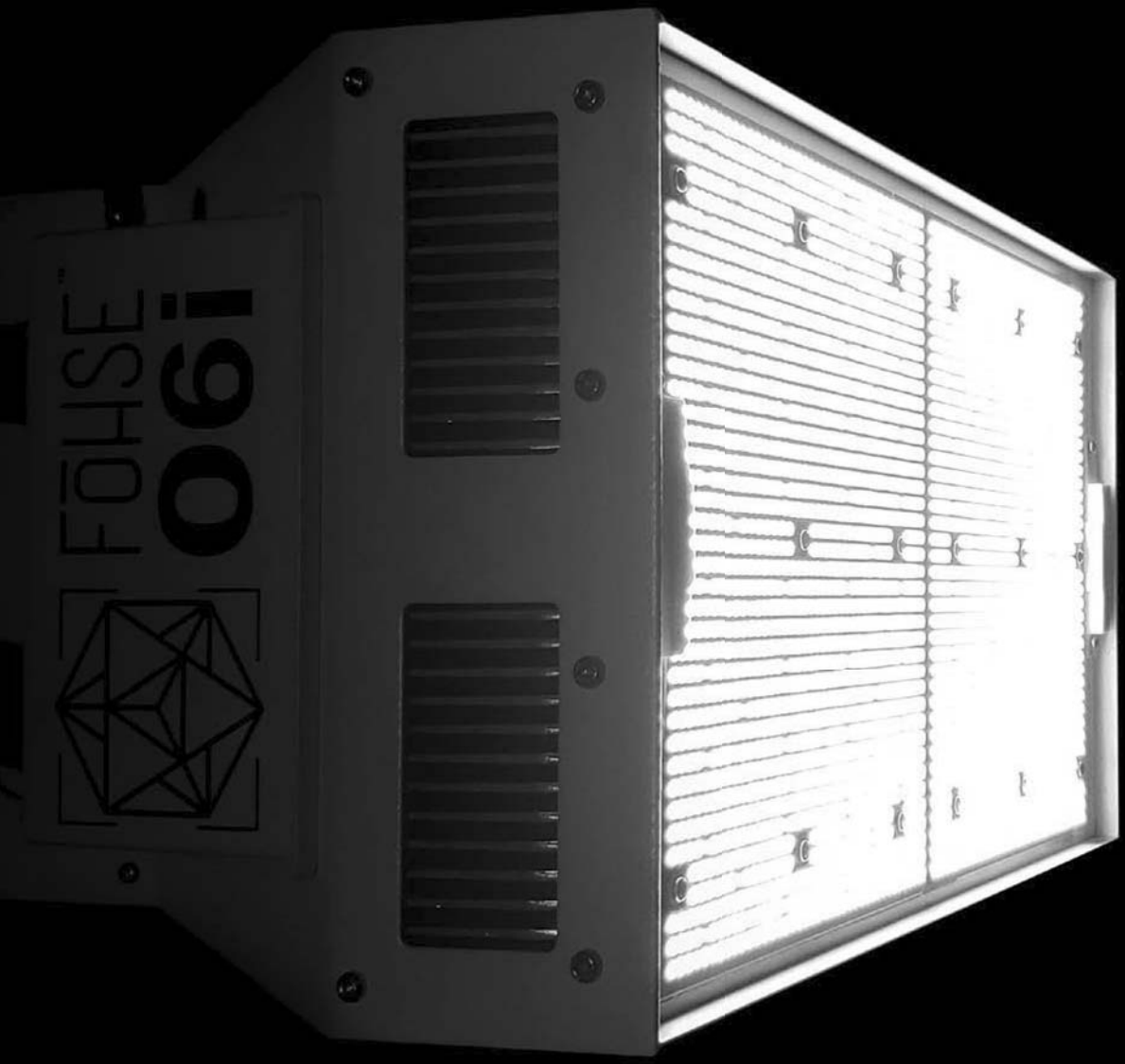

FŌHSE™

FUTURE OF HORTICULTURAL

O6i LIGHT PLAN FOR HOLISTIC HEALTH GROUP
GREENHOUSE 70’x41.5’

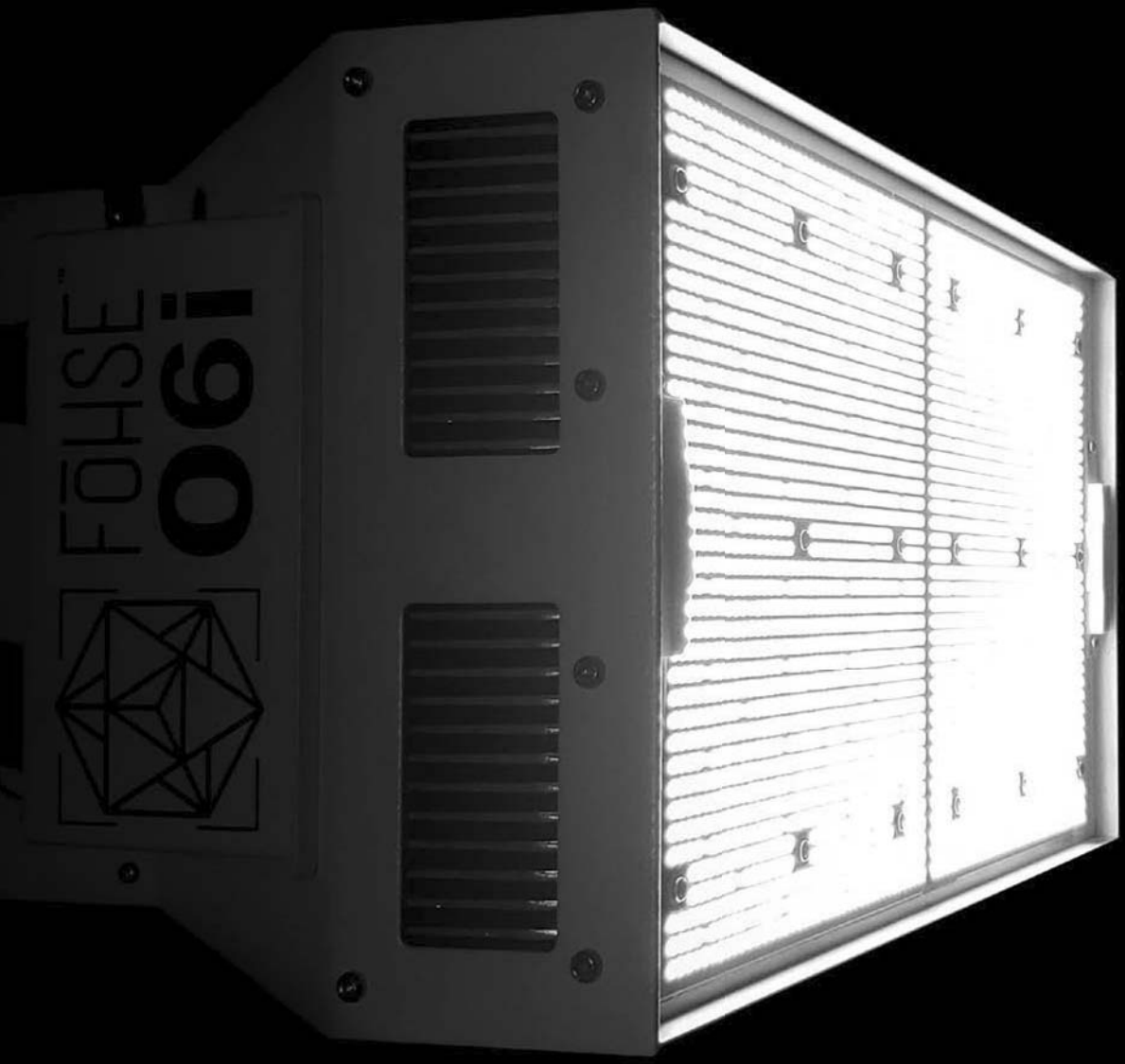

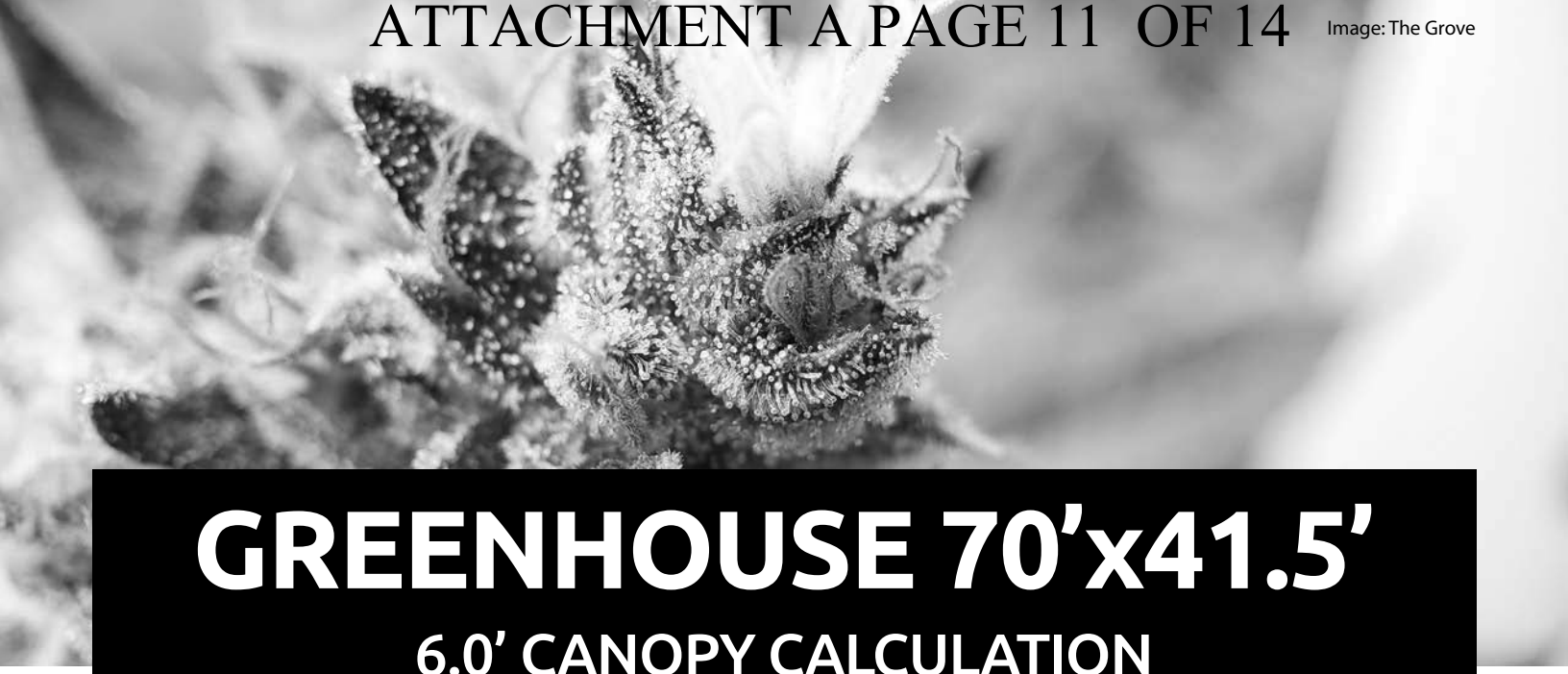

Image: The Grove

GREENHOUSE 70'x41.5'

6.0' CANOPY CALCULATION

ROOM AREA
2905.07 sq ft

CANOPY DISTANCE
6.0 ft

FIXTURE TYPE
O6i 1200W

FIXTURE QUANTITY
36

AVERAGE CANOPY PPFD
528 µmol/m²s

MAXIMUM CANOPY PPFD
588 µmol/m²s

MINIMUM CANOPY PPFD
432 µmol/m²s

POWER DENSITY
14.44 W/sq ft

AVERAGE DLI, DAY = 12/12
22.80 mol/day

AVERAGE DLI, DAY = 18/6
34.21 mol/day

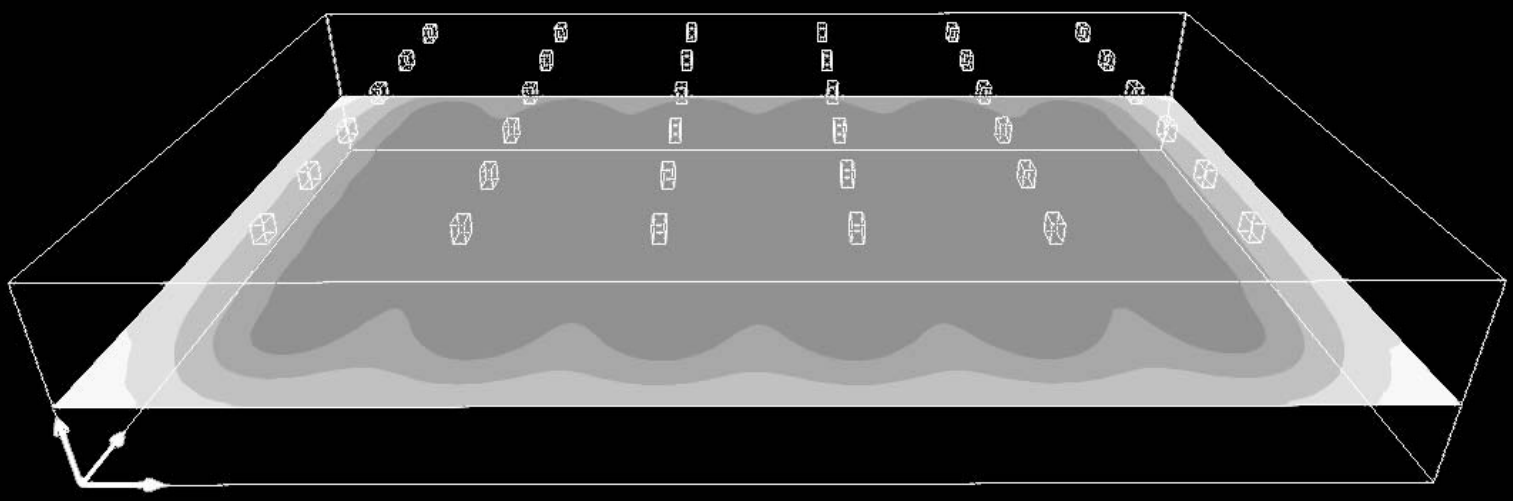

Image: Green Life Productions

FIXTURE ARRAY LAYOUT

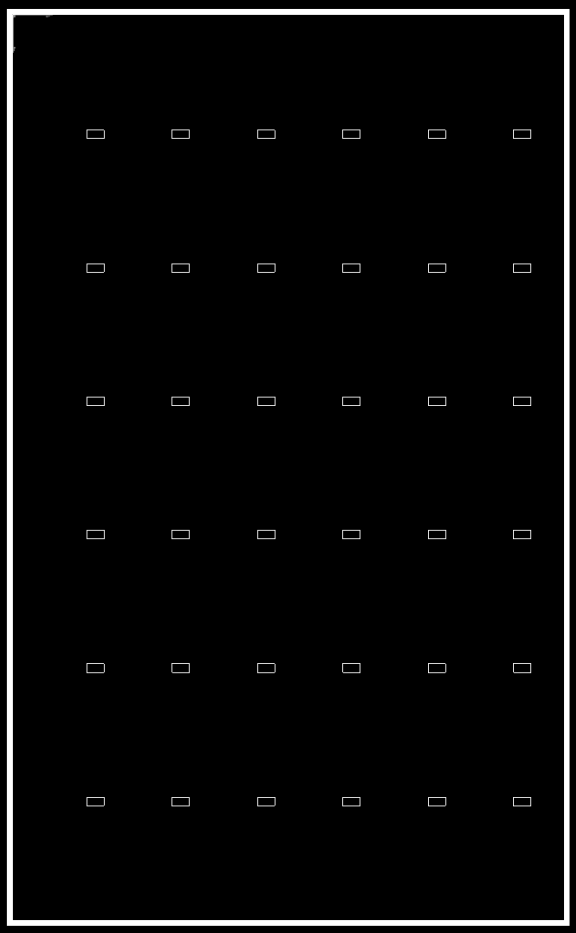

PPFD FALSE COLORS

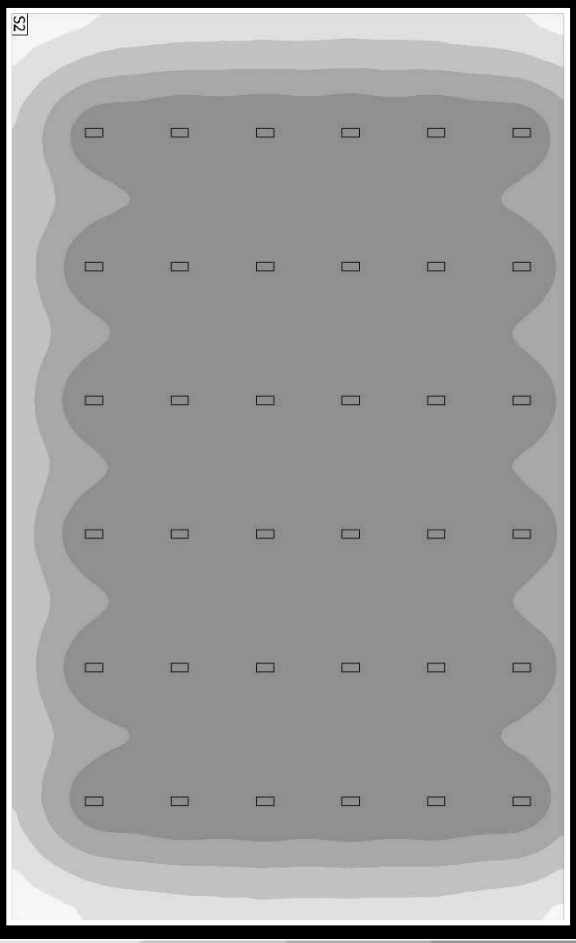

75μmol/m²s 110 175 280 426 693

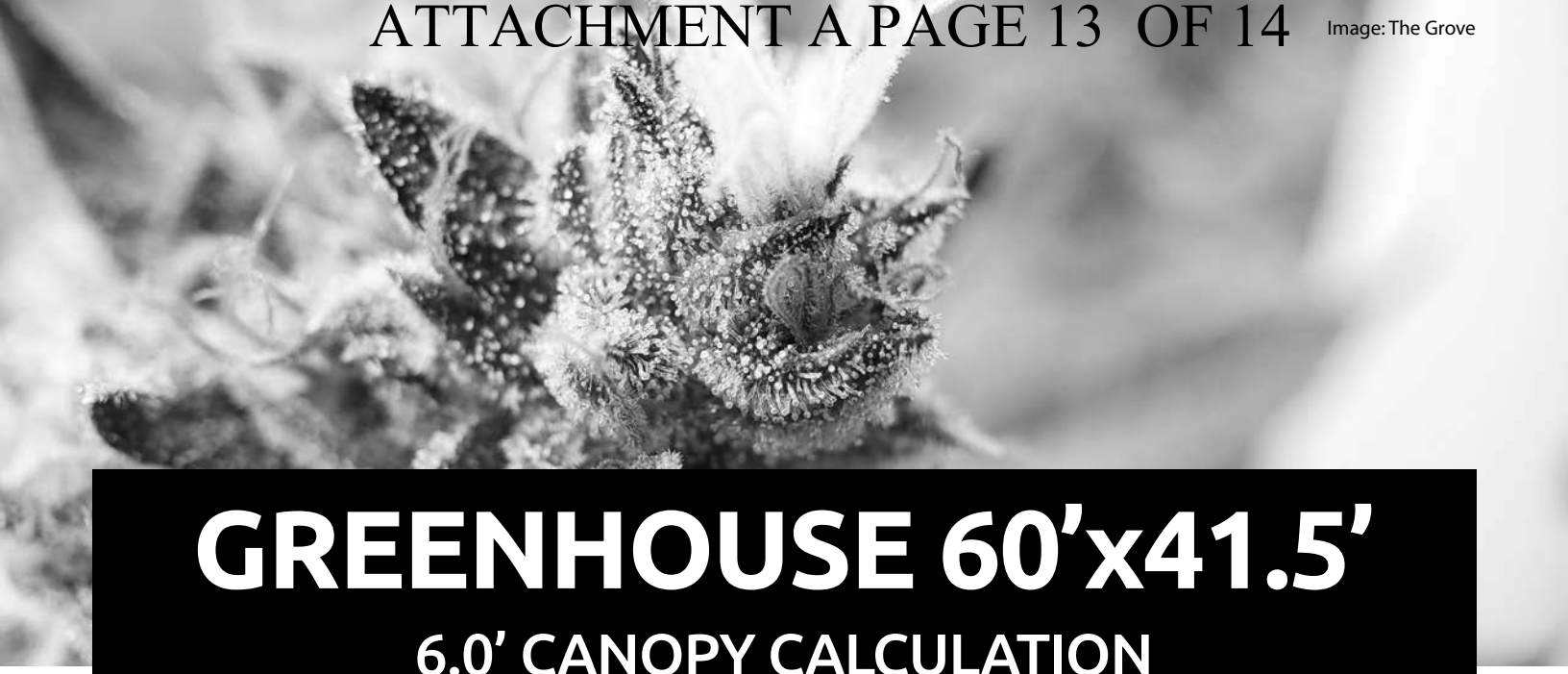

Image: The Grove

GREENHOUSE 60'x41.5'

6.0' CANOPY CALCULATION

ROOM AREA
2490.06 sq ft

CANOPY DISTANCE
6.0 ft

FIXTURE TYPE
O6i 1200W

FIXTURE QUANTITY
30

AVERAGE CANOPY PPFD
535 µmol/m²s

MAXIMUM CANOPY PPFD
696 µmol/m²s

MINIMUM CANOPY PPFD
376 µmol/m²s

POWER DENSITY
14.04 W/sq ft

AVERAGE DLI, DAY = 12/12
23.11 mol/day

AVERAGE DLI, DAY = 18/6
34.66 mol/day

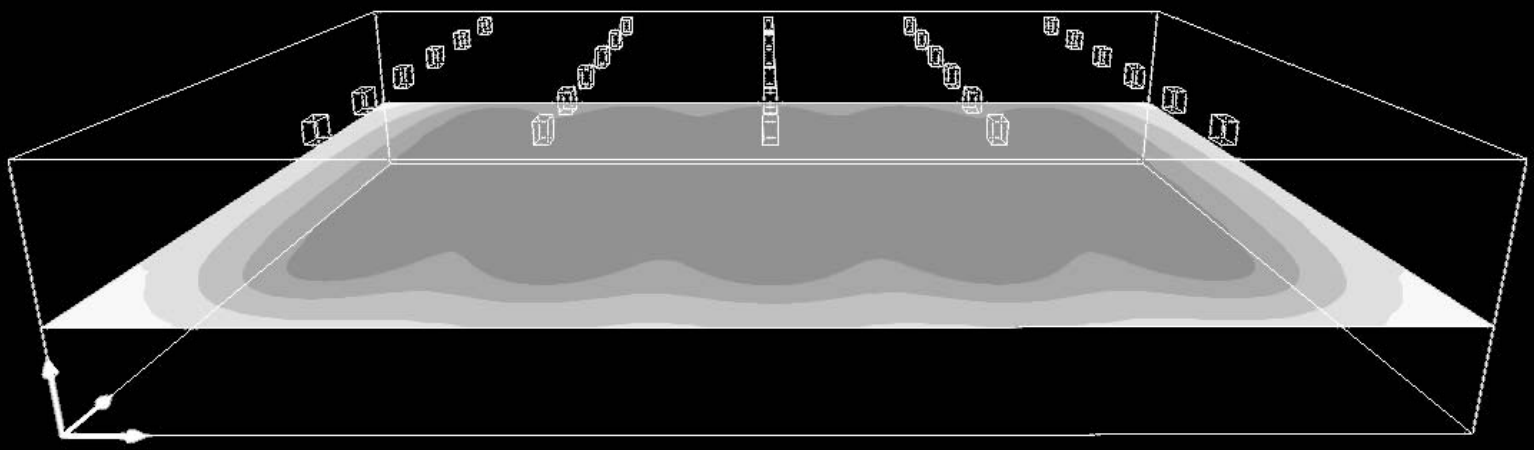

ATTACHMI

Image: Green Life Productions

FIXTURE ARRAY LAYOUT

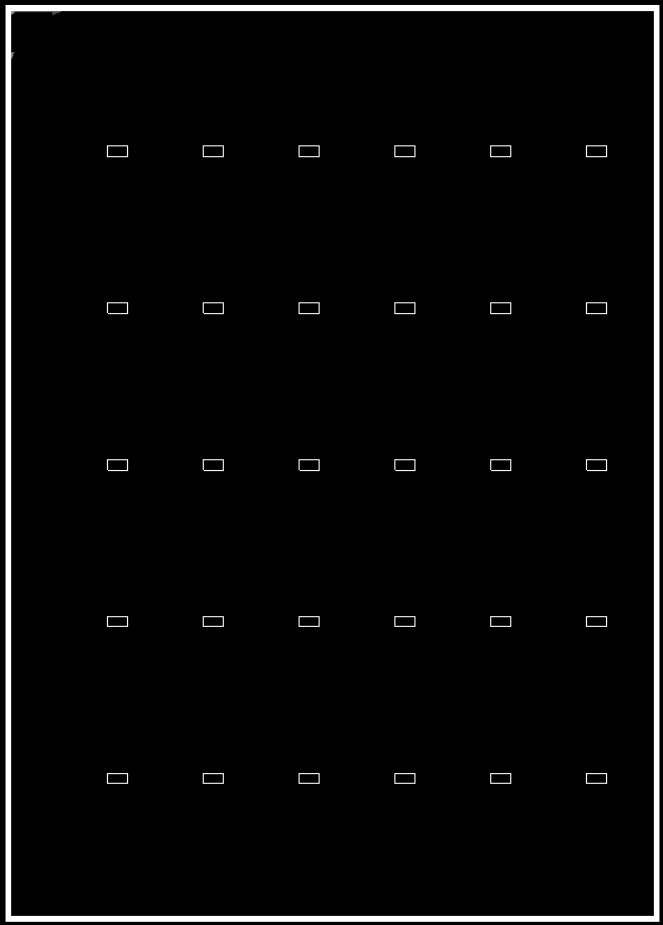

PPFD FALSE COLORS

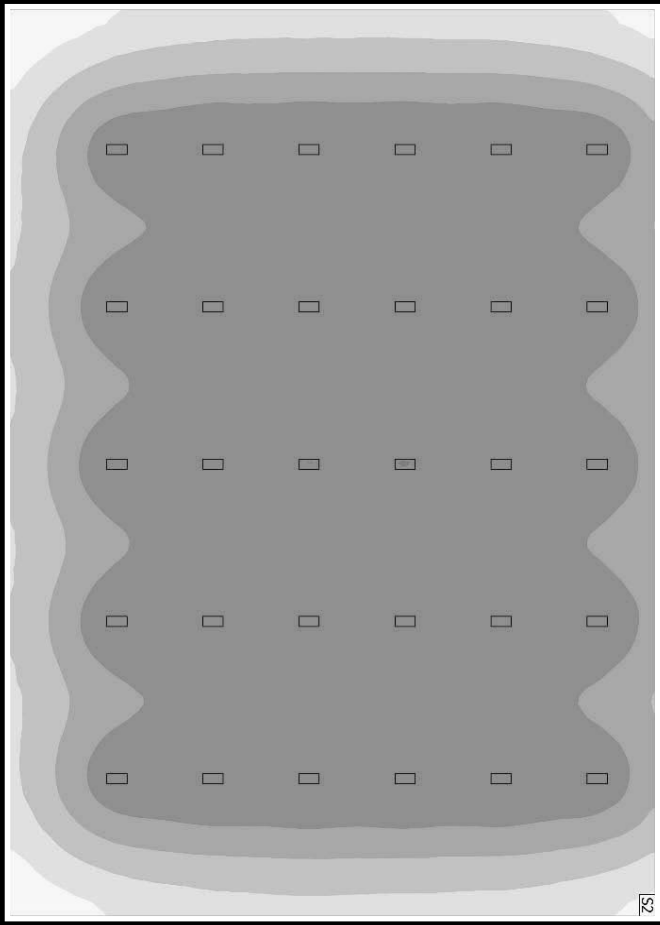

70μmol/m²s 108 173 275 420 697

SUBMITTAL

Project

Holistic Health

Date

Tuesday, July 14, 2020

Unit Report For CH-1 Pumps

Project: ~Untitled38 07/14/2020
Prepared By: 09:42AM

Unit Information

Tag Name:	**CH-1 Pumps**	
Model Number:	**30RB100**	
Condenser Type:	**Air Cooled**	
Compressor Type:	**Scroll**	
Nameplate Voltage:	**460-3-60**	V-Ph-Hz
Quantity:	**1**	
Manufacturing Source:	**Charlotte, NC USA**	
Refrigerant:	**R410A**	
Independent Refrigerant Circuits:	**2**	
Capacity Control Steps:	**4**	
Minimum Capacity:	**25.0**	%
Shipping Weight:	**6813**	lb
Operating Weight:	**7078**	lb
Unit Length:	**142**	in
Unit Width:	**89**	in
Unit Height:	**90**	in

Accessories and Installed Options

Freeze Protection
Al Fin/Cu Tube
Dual Pump, 15 HP w/ VFD
Low Ambient Head Pressure Control
Single Point
Coil Trim Panels

Chiller Warranty Information (Note: for US & Canada only)

First Year - Parts Only (Standard)
Start-up and Complete Unit 1st Year Labor, First Unit
Compressor Years 2-5 Parts Only

Ordering Information

Part Number	Description	Quantity
30RBX1006-RH2--3	Packaged Chiller	1
	Base Unit	
	Freeze Protection	
	Al Fin/Cu Tube	
	Dual Pump, 15 HP w/ VFD	
	Low Ambient Head Pressure Control	
	Single Point	
	Coil Trim Panels	

Certified Drawing for CH-1 Pumps

Project: ~Untitled38 | 07/14/2020
Prepared By: | 09:42AM

NOTES: 1. UNIT MUST HAVE CLEARANCES AS FOLLOWS:
TOP- DO NOT RESTRICT
SIDES AND END- 6' FROM SOLID SURFACE.FOR AIRFLOW
SIDE- 8' REQUIRED FOR COIL SERVICE AREA.
2. ALL PUMPS HAVE DRAINS LOCATED AT THE BOTTOM OF VOLUTE FOR DRAINING.
3. TEMPERATURE RELIEF DEVICES LOCATED ON SUCTION LINE,LIQUID LINE AND FILTER DRIER OF EACH CIRCUIT AND HAVE 1/4" FLARE CONNECTION.
4. NO PUMP PACKAGE LEAVING WATER CONNECTION IS SAME SIZE AND HAS SAME Y AND Z DIMENSIONS AS ENTERING WATER. ALSO HAS SAME PDx DIMENSION AS PUMP PACKAGE.

UNITED TECHNOLOGIES CARRIER P.O. BOX 4808 SYRACUSE, NY 13221

THIS DOCUMENT IS THE PROPERTY OF CARRIER CORPORATION AND IS DELIVERED UPON THE EXPRESS CONDITION THAT THE CONTENTS WILL NOT BE DISCLOSED OR USED WITHOUT CARRIER CORPORATION'S WRITTEN CONSENT.

SUBMISSION OF THESE DRAWINGS OR DOCUMENTS DOES NOT CONSTITUTE PART PERFORMANCE OR ACCEPTANCE OF CONTRACT.

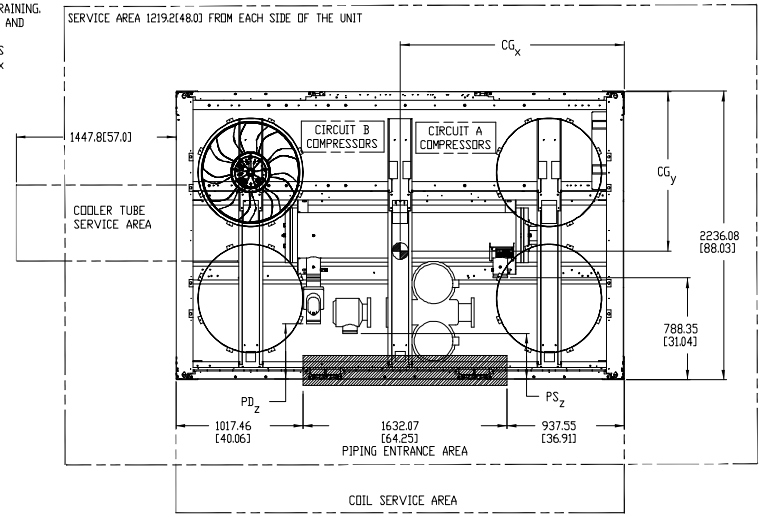

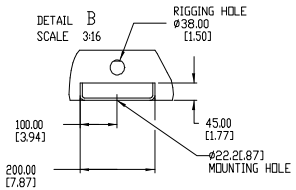

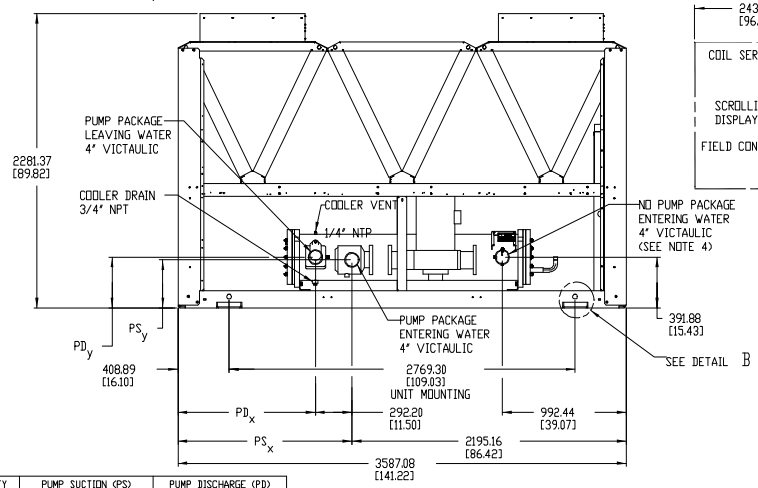

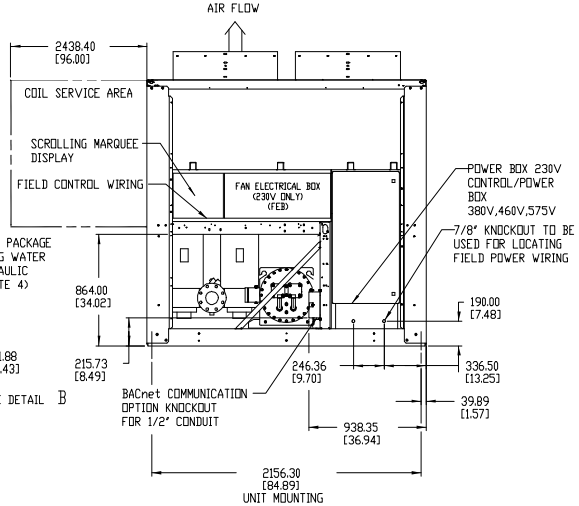

	WEIGHT CU/AL lb/kg	MAX WEIGHT CU/AL PUMP lb/kg	WEIGHT CU/CU lb/kg	MAX WEIGHT CU/CU PUMP lb/kg	WEIGHT MCHX lb/kg	MAX WEIGHT MCHX PUMP lb/kg	CENTER OF GRAVITY		PUMP SUCTION (PS)			PUMP DISCHARGE (PD)		
							CGx MM [INCH]	CGy MM [INCH]	X ±.25	Y ±.25	Z ±.25	X ±.25	Y ±.25	Z ±.25
30RB-090	5932 2697	6855 3116	6656 3026	7579 3445	5449 2472	6372 2890	1625 [64.0]	1017 [40.0]	1389.4 [54.7]	309.9 [12.2]	353.1 [13.9]	1097.3 [43.2]	497.8 [19.6]	170.2 [6.7]
30RB-100	6155 2798	7078 3217	6879 3127	7802 3547	5663 2569	6586 2987	1614 [63.5]	999 [39.3]	1389.4 [54.7]	309.9 [12.2]	353.1 [13.9]	1097.3 [43.2]	497.8 [19.6]	170.2 [6.7]

DATE	SUPERCEDES			REV
06/10/10	04/20/10	30RB-090,100 AIR COOLED CHILLER	00DCN500000300A	H.4

Field Wiring Diagram for CH-1 Pumps

Project: ~Untitled38
Prepared By:

07/14/2020
09:42AM

NOTES:

1. FACTORY WIRING IS IN ACCORDANCE WITH UL 1995 STANDARDS. FIELD MODIFICATIONS OR ADDITIONS MUST BE IN COMPLIANCE WITH ALL APPLICABLE CODES.
2. WIRING FOR MAIN FIELD SUPPLY MUST BE RATED 75C MINIMUM. USE COPPER FOR ALL UNITS.
   INCOMING WIRE SIZE RANGE FOR THE TERMINAL BLOCK IS #4 AWG TO 500 KCMIL.
   INCOMING WIRE SIZE RANGE OF NON-FUSED DISCONNECT WITH MCA UP TO 599.9 AMPS IS 3/0 TO 500 KCMIL.
   INCOMING WIRE SIZE RANGE OF NON-FUSED DISCONNECT WITH MCA FROM 600 TO 799.9 AMPS IS 1/0 TO 500 KCMIL.
   INCOMING WIRE SIZE RANGE OF NON-FUSED DISCONNECT WITH MCA FROM 800 TO 1199.9 AMPS IS 250 KCMIL TO 500 KCMIL.
3. TERMINALS 9 AND 10 OF TB5 ARE FOR FIELD EXTERNAL CONNECTIONS FOR REMOTE ON-OFF. THE CONTACTS MUST BE RATED FOR DRY CIRCUIT APPLICATION CAPABLE OF HANDLING A 24VAC LOAD UP TO 50 MA.
4. TERMINALS 1 AND 2 OF TB5 ARE FOR EXTERNAL CONNECTIONS OF CHILLED WATER PUMP INTERLOCK. THE CONTACTS MUST BE RATED FOR DRY CIRCUIT APPLICATION CAPABLE OF HANDLING A 24VAC LOAD UP TO 50 MA.
5. TERMINALS 11 AND 13 OF TB5 ARE FOR CONTROL OF CHILLED WATER PUMP1 (PMP1) STARTER. TERMINALS 13 AND 15 OF TB5 ARE FOR CONTROL OF CHILLED WATER PUMP2 (PMP2) STARTER. THE MAXIMUM LOAD ALLOWED FOR THE CHILLED WATER PUMP RELAY IS 5 VA SEALED, 10 VA INRUSH AT 24V. FIELD POWER SUPPLY IS NOT REQUIRED.
6. FOR CONTROL OF CHILLED WATER PUMPS, A SET OF NORMALLY OPEN CONTACTS RATED FOR DRY CIRCUIT APPLICATION MUST BE SUPPLIED FROM FIELD SUPPLIED PUMP STARTER RELAY. CONNECT CONTACTS TO VIOLET AND PINK WIRES IN HARNESS FROM MAIN BASE BOARD CHANNEL 1B. WIRES IN HARNESS ARE MARKED PMP1-13 AND PMP1-14.
7. TERMINALS 12 AND 13 OF TB5 ARE FOR A ALARM RELAY. THE MAXIMUM LOAD ALLOWED FOR THE ALARM RELAY IS 10 VA SEALED, 25 VA INRUSH AT 24V. FIELD POWER SUPPLY IS NOT REQUIRED.
8. MAKE APPROPRIATE CONNECTIONS TO TB6 AS SHOWN FOR ENERGY MANAGEMENT BOARD OPTIONS. THE CONTACTS FOR OCCUPANCY OVERRIDE, DEMAND LIMIT AND ICE DONE OPTIONS MUST BE RATED FOR DRY CIRCUIT APPLICATION CAPABLE OF HANDLING A 24VAC LOAD UP TO 50 MA.
9. J3 - 24 AND 25 OF EMM BOARD ARE FOR RUN RELAY AND SHUTDOWN RELAY. THE MAXIMUM LOAD ALLOWED FOR THE RUN AND SHUTDOWN RELAY IS 10 VA SEALED, 25 VA INRUSH AT 24V. FIELD POWER SUPPLY IS NOT REQUIRED.

LEGEND:
A - ALARM
PMP1- CHILLED WATER PUMP INTERLOCK
CWP - CHILLED WATER PUMP
EMM - ENERGY MANAGEMENT
SHD R- SHUTDOWN RELAY
RUN R- RUN RELAY
MLV - MINIMUM LOAD VALVE
TB - TERMINAL BLOCK
FIELD POWER WIRING
FIELD CONTROL WIRING
DENOTES INSTALLED WIRING

SIZE	STD UNIT
315A,B 330B	160
330A 345A,B 360B	170
360A 390A,B	190

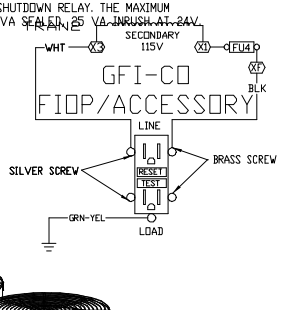

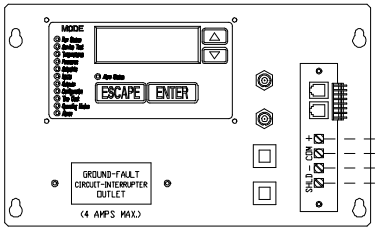

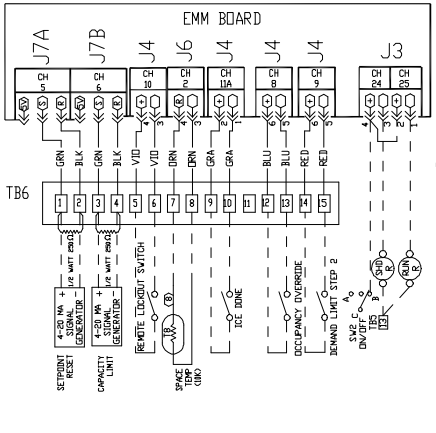

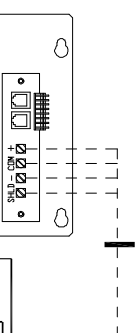

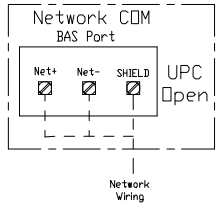

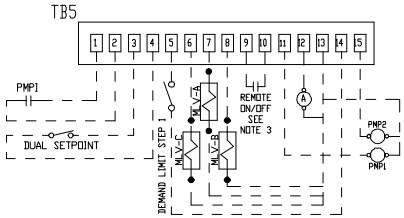

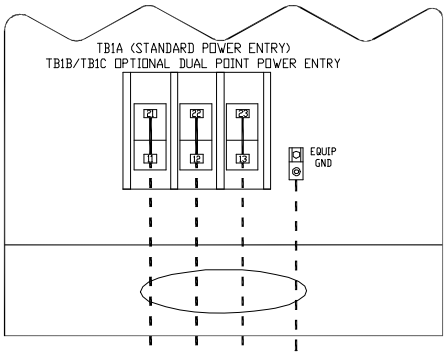

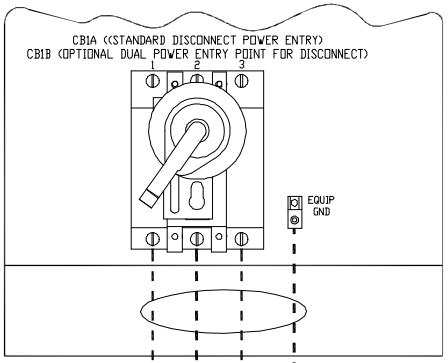

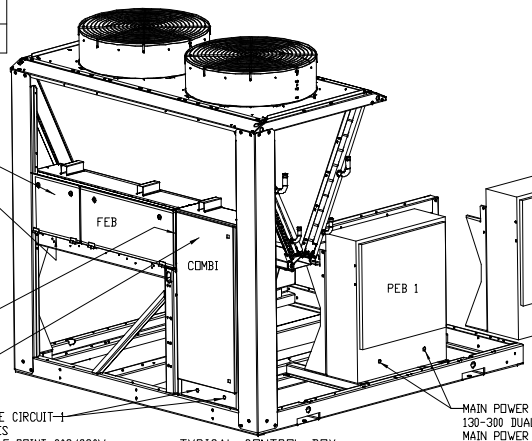

MAIN POWER ENTRANCE CIRCUIT 1
060-120 ALL VOLTAGES
130-190 DUAL & SINGLE POINT 208/230V
210-300 DUAL POINT 208/230V
MAIN POWER ENTRANCE CIRCUIT 2
060-120 DUAL POINT,ALL VOLTAGES
130-190 DUAL POINT WITH DISCONNECT OPTION,380/460/575V
210,225 DUAL POINT WITH DISCONNECT OPTION,380/460/575V

TYPICAL CONTROL BOX LOCATIONS AND MAIN POWER ENTRY

MAIN POWER ENTRANCE CIRCUIT 1
130-300 DUAL & SINGLE POINT,380/460/575V
MAIN POWER ENTRANCE CIRCUIT 2
130-190 DUAL POINT,208/230V
130-190 DUAL POINT WITH TERMINAL BLOCKS,380/460/575V
210,225 DUAL POINT WITH TERMINAL BLOCKS,380/460/575V

MAIN POWER ENTRANCE CIRCUIT 2
210-300 DUAL POINT,208/230V
250-300 DUAL POINT,460/575V

UNITED TECHNOLOGIES CARRIER P.O. BOX 4808 SYRACUSE, NY 13221

THIS DOCUMENT IS THE PROPERTY OF CARRIER CORPORATION AND IS DELIVERED UPON THE EXPRESS CONDITION THAT THE CONTENTS WILL NOT BE DISCLOSED OR USED WITHOUT CARRIER CORPORATION'S WRITTEN CONSENT.

SUBMISSION OF THESE DRAWINGS OR DOCUMENTS DOES NOT CONSTITUTE PART PERFORMANCE OR ACCEPTANCE OF CONTRACT.

DATE	SUPERCEDES			REV
06/10/10	03/09/09	30RB060-390 AIR-COOLED AQUASNAP CHILLER	00DCN500001300A	G.2

Summary Performance Report For CH-1 Pumps

Project: ~Untitled38 07/14/2020
Prepared By: 09:42AM

AquaSnap™ Air-Cooled Scroll Chiller

Unit Information

Tag Name:	**CH-1 Pumps**	
Model Number:	**30RB100**	
Quantity:	**1**	
Manufacturing Source:	**Charlotte, NC USA**	
ASHRAE 90.1:	**2010, 2007**	
Refrigerant:	**R-410A**	
Independent Refrigerant Circuits:	**2**	
Shipping Weight:	**6813**	lb
Operating Weight:	**7078**	lb
Refrigerant Weight (Circuit A):	**96**	lb
Refrigerant Weight (Circuit B):	**96**	lb
Unit Length:	**142**	in
Unit Width:	**89**	in
Unit Height:	**90**	in

Evaporator Information

Fluid Type:	**Propylene Glycol**	
Brine Concentration:	**30.00**	%
Fouling Factor:	**0.000100**	(hr-sqft-F)/BTU
Leaving Temperature:	**35.00**	°F
Entering Temperature:	**42.88**	°F
Fluid Flow:	**268.0**	gpm
Pressure Drop:	**23.6**	ft H2O

Condenser Information

Altitude:	**0.000**	ft
Number of Fans:	**6**	
Total Condenser Fan Air Flow:	**74,400**	CFM
Entering Air Temperature:	**89.0**	°F

Integrated Pump Information

Dynamic Head At Pump:	**123.2**	ft
Dynamic Head External To Chiller:	**99.6**	ft

Performance Information

Cooling Capacity:	**84.33**	Tons
Total Compressor Power:	**87.58**	kW
Total Fan Motor Power:	**16.11**	kW
Pump Power:	**10.03**	kW
Total Unit Power (without pump):	**103.7**	kW
Total Unit Power (with pump):	**113.7**	kW
Efficiency (without pump) (EER):	**9.759**	BTU/Wh
IPLV:.IP:	**13.53**	BTU/Wh

Accessories and Installed Options

Freeze Protection
Al Fin/Cu Tube
Dual Pump, 15 HP w/ VFD
Low Ambient Head Pressure Control
Single Point
Coil Trim Panels

Electrical Information

Unit Voltage:	**460-3-60**	V-Ph-Hz
Connection Type:	**Single Point**	
Minimum Voltage:	**414**	Volts
Maximum Voltage:	**506**	Volts

Amps	Electrical Circuit 1	Electrical Circuit 2
MCA	226.2	---
MOCP	250.0	---
ICF	439.7	---
Rec Fuse Size	250.0	---

All performance efficiency data are without pump.

Summary Performance Report For CH-1 Pumps

Project: ~Untitled38 07/14/2020
Prepared By: 09:42AM

Sound power measured in accordance with ANSI/AHRI Standard 370-2015.

Certified in accordance with the AHRI Air-Cooled Water-Chilling Packages Certification Program, which is based on AHRI Standard 550/590 (I-P) and AHRI Standard 551/591 (SI). Certified units may be found in the AHRI Directory at www.ahridirectory.org. Unit contains freeze protection fluids in the evaporator with a leaving chilled fluid temperature above 32°F [0°C] is certified when rated per the Standard with water.

Summary Performance Report For CH-1 Pumps

Project: ~Untitled38 07/14/2020
Prepared By: 09:42AM

Unit Parameters

Tag Name:	**CH-1 Pumps**	
Model Number:	**30RB100**	
Condenser Type:	**Air Cooled**	
Compressor Type:	**Scroll**	
Chiller Nameplate Voltage:	**460-3-60**	V-Ph-Hz
Quantity:	**1**	
Manufacturing Source:	**Charlotte, NC USA**	
Refrigerant:	**R-410A**	
Shipping Weight:	**6813**	lb
Operating Weight:	**7078**	lb
Refrigerant Weight (Circuit A):	**96**	lb
Refrigerant Weight (Circuit B):	**96**	lb
Unit Length:	**142**	in
Unit Width:	**89**	in
Unit Height:	**90**	in

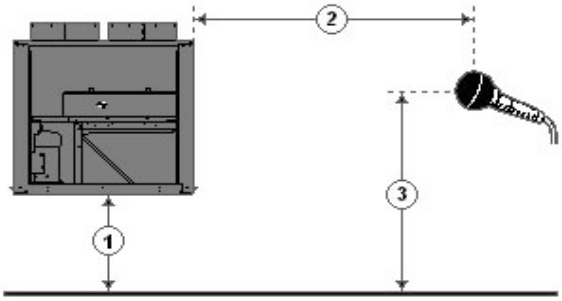

1 - Chiller Height Above Ground
2 - Horizontal Distance From Chiller to Receiver
3 - Receiver Height Above Ground
(See Note 3)

Accessories and Installed Options

Freeze Protection
Al Fin/Cu Tube
Dual Pump, 15 HP w/ VFD
Low Ambient Head Pressure Control
Single Point
Coil Trim Panels

Acoustic Information

Table 1. A-Weighted Sound Power Levels (dB re 1 picowatt). See note #1.

Octave Band Center Frequency, Hz	31	63	125	250	500	1k	2k	4k	8k	Overall
100% Load	---	68	80	87	93	97	92	88	80	100
75% Load	---	67	80	87	93	97	92	88	79	100
50% Load	---	67	80	87	92	97	91	88	79	100
25% Load	---	64	80	85	89	93	89	85	76	97

Table 2. A-Weighted Sound Pressure Levels (dB re 20 micropascals) calculated based upon user defined input for dimensions 1, 2 and 3 as shown in above diagram. See note #2 and #3.

Octave Band Center Frequency, Hz	31	63	125	250	500	1k	2k	4k	8k	Overall
100% Load	---	40	52	59	65	69	64	60	52	72
75% Load	---	39	52	59	64	69	63	60	51	72
50% Load	---	39	51	58	64	69	63	59	51	71
25% Load	---	36	52	57	61	65	61	57	48	69

Notes: (1) Measurements performed in accordance with AHRI Standard 370-2015 for air cooled Chillers.
(2) Chiller is assumed to be a point source on a reflecting plane.
(3) Without user defined input, the default dimensions used to construct Table 2 are as follows:
1 - Chiller Height Above Ground = 0.0 ft
2 - Horizontal Distance From Chiller to Receiver = 30.0 ft
3 - Receiver Height Above Ground = 3.0 ft

Acoustic Summary For CH-1 Pumps

Project: ~Untitled38 07/14/2020
Prepared By: 09:42AM

Please refer to Performance Output Summary or Detailed Performance Report for Acoustic information

XTherm™ - Type H

Heating Boilers
Models 1005A-2005A

Job: Holistic Health

Engineer: _____

Contractor: _____

Prepared By: BioTherm Date: _____

Model: 1505 Indoor/Outdoor: Indoor

96% Thermal Efficiency at Full Rate; Up to 99% at Part Load

100% Factory Fire Tested

VERSA IC™ Modulating Controller with LCD Display

Full Electronic Modulation, Constant Ratio 7:1 Turndown

Full Safety Diagnostics with History

Status Display Lights

Cascade up to 4 Heaters – No External Sequencer Required

Modbus RTU BMS Port

Maximum Outlet Water Temperature: 235°F

Minimum Inlet Water Temperature: 50°F

Limited Twenty-Five-Year Thermal Shock Warranty

Limited Ten-Year Primary Heat Exchanger Warranty

Limited Ten-Year Secondary Heat Exchanger Warranty

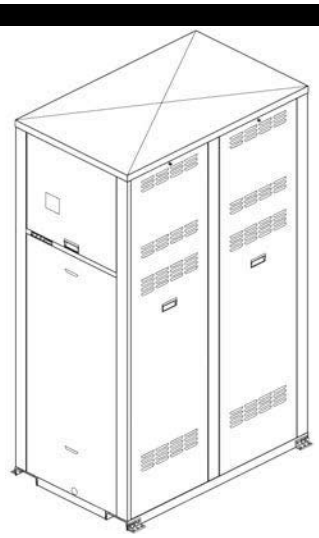

Proudly Assembled in the USA

Heat Exchanger
- Headers
  - ☐ Cast Iron – Standard
  - ☐ Bronze – Option A-1
- ASME H Stamped; 160 PSIG MAWP
- National Board Listed
- Fin Tubing
  - ☐ Copper – Standard
  - ☐ Cupro Nickel – Option A-3
- ASME Powder-Coated Tube Sheet
- Silicone High Temp O-Rings
- ASME Pressure Relief Valve
  - ☐ 60 PSIG – Standard
  - ☐ _____ PSIG – Optional
- 150 PSI Air Vent, Auto
- T&P Gauge, Shipped Loose
- Stainless Steel Secondary Heat Exchanger
- Stainless Steel Evaporator Plate
- Boiler Pump: 120V, 1∅, 60Hz;
  - ☐ Cast Iron – Standard
  - ☐ Bronze – Option

Control
- 120V, 60Hz, 1Ø, Power Supply
- 120/24V 60Hz Transformer
- Ignition Module
  - ☐ 3-Try – Standard
  - ☐ Single-Try – Option C-6
- Hot Surface Ignition (HSI)
- Remote Flame Sensor
- Fixed High Limit, Manual Reset, 240°F
- On/Off Power Switch
- Flow Switch
- Blocked Vent Pressure Switch
- Freeze Protection
- Alarm Dry Contact
- Pump Outputs – Pilot Duty
  - DHW Indirect
  - System
- Programmable Pump Time Delays
- LCD Display: Status, Fault and Diagnostics
- Modulating Temperature Control; 7:1 turndown
- Water Temperature Sensors (7)
- Cold Water Protection – Built In
- Blocked Condensate Switch
- Modbus RTU BMS Port (Up to 115K Baud Rate, see Cat. No. 5000.73)
- ☐ B-85 BMS Gateway, Modbus RTU to Modbus TCP, N2 Metasys, BACnet IP, or BACnet MS/TP
- ☐ B-86 BMS Gateway, Modbus RTU to LonWorks

Burner
- Radially Fired Knitted Burner

Gas Train
- Fuel
  - ☐ Natural Gas
  - ☐ Propane
- Dual-Seat Combination Valve
- Manual Shut Off Firing Valve

Construction
- Indoor/Outdoor Construction
- Enclosed Front Controls
- PolyTuf Powder Coat Finish
- Rear Connections (Water, Gas, Vent, Electrical, Comb. Air, Cond. Drain)
- Combustion Air Filter
- Design Certified ANSI Z21.13/CSA 4.9
- Front Connection Low Voltage Wiring

Venting
- Vent Termination, Cat IV
  - ☐ Outdoor or Indoor, Vertical – Option D-11
  - ☐ Indoor, Horizontal – Option D-15
- Extractor – Optional, Cat II
  - ☐ By others
  - ☐ Not required

Options
- ☐ D-32* PVC Vent Adapter (Includes 162ºF Manual Vent Limit) (Factory installed only)
- ☐ D-33 Centrotherm™ Polypropylene Vent Adapter (Includes 180ºF Manual Vent Limit) (shipped loose)
- ☐ F-10 Low Water Cut-Off, Remote Probe
- ☐ I-1 High Limit, Auto Reset, Adj., 100-240°F
- ☐ I-2 High Limit, Manual Reset, Adj., 100-240°F
- ☐ S-1 Low Gas Pressure Switch, Manual Reset
- ☐ S-2 High Gas Pressure Switch, Manual Reset
- ☐ Z-12 Condensate Neutralizer Kit

Regulatory Agency Requirements
- ☐ _____

Multi-Boiler Digital Temp Controllers
- ☐ B-36 TempTracker Mod+ Hybrid, 2-4 Boilers, OA Reset
- ☐ B-37 TempTracker Mod+ Hybrid, 5-10 Boilers, OA Reset
- ☐ B-38 TempTracker Mod+ Hybrid, 11-16 Boilers, OA Reset
- ☐ B-39* EMS 4-20 mA Remote Setpoint Interface Module
- ☐ B-62* BACnet MS/TP Interface Module (*only used with B-36 to B-38)

* Requires 200ºF Manual Reset High Limit & 180ºF Max Setpoint

Raypak® A Rheem® Company

XTherm – Type H
Models 1005A-2005A

Model _____

NOTE: Primary/Secondary plumbing is mandatory for proper operation.

CLEARANCES (in.)

	Front	Rear	Right	Left	Top	Floor	Vent
Certified Minimum	24	12	1	1	0	0	1
Minimum Service	24	36	24	1	10	N/A	N/A

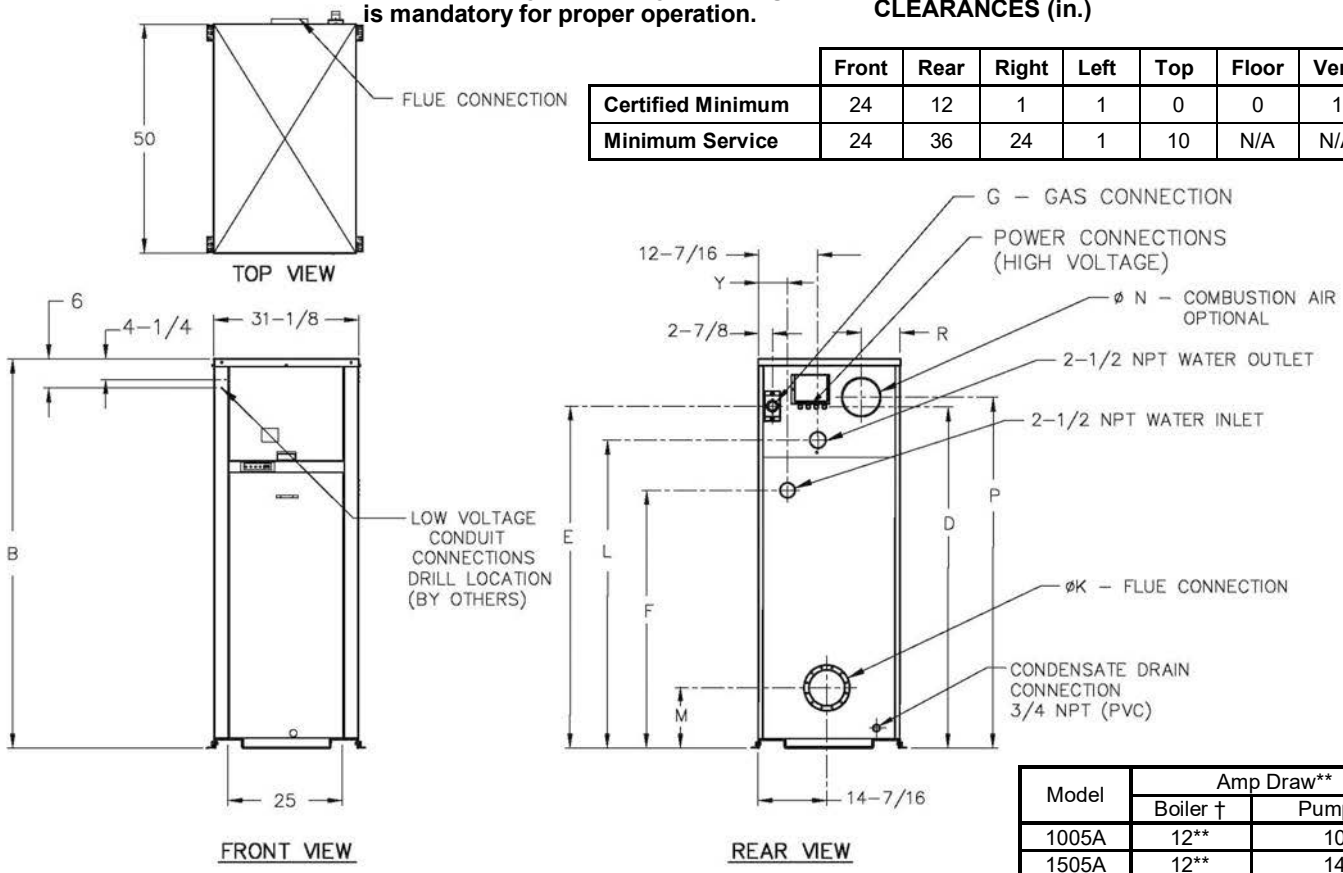

Model	Amp Draw**	
	Boiler †	Pump †
1005A	12**	10
1505A	12**	14
2005A	18**	17

† Separate power connections are factory supplied and separate supply breakers must be field supplied.
** Current draw is for boiler only (Supply breaker must have delayed trip).

Model (H7-)	MBTUH		Dimensions (in)												Ship Weight (Lbs.)
	Input	Output	B Height	D	E	F	G* NPT	K Flue Ø	L	M	N C/A Ø	P	R	Y	
☐1005A	999	959	55-1/8	45	47-1/8	36-1/2	1-1/4	6	40-1/16	11-1/2	6	47-1/8	8-1/16	6-1/16	1065
☐1505A	1500	1440	67-1/8	57	59-1/16	38-1/2	1-1/4	8	52-1/16	12-5/8	8	59-1/8	8-3/16	6-1/16	1234
☐2005A	1999	1919	81-1/8	71	71-3/16	38-1/2	2	8	64-1/16	12-5/8	8	73-1/8	8-3/16	6-1/4	1461

Note: Ratings shown are for elevations up to 4,500 feet. For installations at elevations above 4,500 feet, please consult the factory for additional instructions.

* For Propane Gas, all models are 1" NPT

System Return Temp (ºF)	☐Model 1005A			☐Model 1505A			☐Model 2005A		
	Supply Temp[1] (ºF)	Minimum Pipe Size[2]		Supply Temp[1] (ºF)	Minimum Pipe Size[2]		Supply Temp[1] (ºF)	Minimum Pipe Size[2]	
		<80' eq	80-200' eq		<80' eq	80-200' eq		<80' eq	80-200' eq
60	138	2" NPT	2-1/2" NPT	147	2" NPT	2-1/2" NPT	154	2" NPT	2-1/2" NPT
80	138	2" NPT	2-1/2" NPT	147	2" NPT	2-1/2" NPT	154	2-1/2" NPT	3" NPT
100	138	2-1/2" NPT	3" NPT	147	2-1/2" NPT	3" NPT	154	2-1/2" NPT	3" NPT
120	145	2-1/2" NPT	3" NPT	158	2-1/2" NPT	3" NPT	170	2-1/2" NPT	3" NPT
140	165	2-1/2" NPT	3" NPT	178	2-1/2" NPT	3" NPT	190	2-1/2" NPT	3" NPT
160	185	2-1/2" NPT	3" NPT	198	2-1/2" NPT	3" NPT	210	2-1/2" NPT	3" NPT

[1] – Approximate high fire heater outlet temperature based on the standard heater pump and recommended connecting pipe size.

[2] – Minimum pipe size based on total equivalent feet of supply and return piping between the system loop and heater.

Delta Limited™ - Type H

Space Heating/Hot Water Boiler
Models 989B-2339B

Job: Holistic Health

Engineer: _____

Contractor: _____

Prepared By: BioTherm Date: _____

Model: 1529B Indoor/Outdoor: Indoor MBTUH Input: _____

100% Factory Fire Tested

Efficiency: 84%

Maximum Outlet Temperature: 230°F

Minimum Non-Condensing Inlet Temperature: 105°F

Thermal Shock Proof Heat Exchanger

Limited Twenty-Year Thermal Shock Warranty

Limited Ten-Year Closed-System Heat Exchanger Warranty

PolyTuf Powder Coated Cabinet

No Combustible Floor Shield Required

Fan-Assisted

Patented Burner Security Blanket

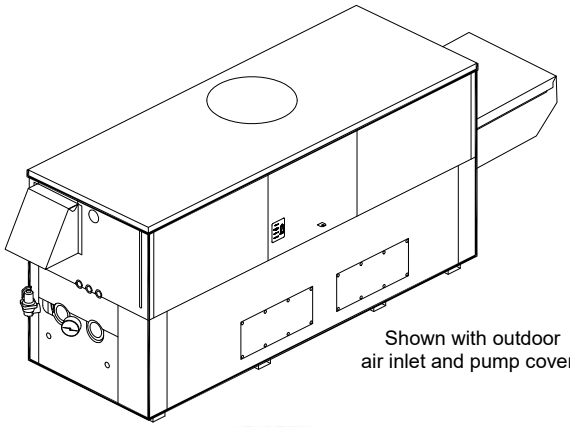

Shown with outdoor air inlet and pump covers

Proudly Made in the U.S.A.

Heat Exchanger
- H Stamp
- Headers
  - ☐ Glass-Lined Cast Iron – Standard
  - ☐ Bronze – Option A-1
- ASME Inspected and Stamped 160 PSIG Working Pressure
- National Board Approved
- Fin Tubing
  - ☐ Copper – Standard
  - ☐ Cupro Nickel – Option A-3
- ASME Steel Tube Sheet
- Silicone High Temp O-Rings
- ASME Pressure Relief Valve
  - ☐ 60 PSIG – Standard
  - ☐ _____ PSIG – Optional
- Temperature and Pressure Gauge
- Water Connections
  - ☐ Left – Standard
  - ☐ Right – Option A-6

Controls
- 120V, 60Hz, 1 Phase Power Supply
- 120/24V 60Hz Transformer
- 100% Shut-Off/Lockout
- Hot Surface Ignition
- Remote Flame Sensor
- High Limit Control, Manual Reset
- On/Off Power Switch
- Manual Shut-Off, Front-Mounted Switch
- Flow Switch
- Blocked Vent Pressure Switch
- Combustion Air Proving Switch
- Pump Time Delay Relay
- Status Display Lights

Gas Train
- Manual Gas Shut-Off Valve(s)
- Combination Valves
- Low Gas Pressure Switch, Manual
- Firing Stages
  - ☐ 2-Stage: Model 989B
  - ☐ 3-Stage: Model 1259B
  - ☐ 4-Stage: Models 1529B-2339B
- Fuel
  - ☐ Natural Gas
  - ☐ Propane Gas
- Design Certified - ANSI Z21.13/CSA 4.9

Burner
- Ultra-Low NOx: Less than 20 PPM

Construction
- Indoor/Outdoor Construction
- Enclosed Front Controls

Venting
- Vent Location
  - ☐ Top, Outdoor – Standard
  - ☐ Top, Indoor – Option D-20
  - ☐ Rear – Option D-14
- Vent Termination Cap
  - ☐ Outdoor D-11
  - ☐ Indoor, Horizontal D-15
  - ☐ Indoor, Vertical (by others)
- Extractor – Optional
  - ☐ By others
  - ☐ Not required

Temperature Controls
- ☐ B-__ TempTracker Digital Controller, 2-Stage (Loose)
- ☐ B-__ TempTracker Digital Controller, 4-Stage (Loose)

Options
- ☐ C-6 Ignition Module, Manual Reset
- ☐ F-10 Low Water Cut-Off, Remote Probe
- ☐ I-1 High Limit Control, Auto Reset
- ☐ P-__ Pump: _____ HP, 120V, 1∅, 60Hz
  Water Hardness: _____ GPG
  - ☐ Cast Iron ☐ Bronze
  - ☐ Mounted ☐ Loose
  - ☐ Front ☐ Rear
- ☐ P-26 Cold Water Start (See 2000.48)
- ☐ S-2 High Gas Pressure Switch, Manual
- ☐ X-1 SureRack™ Kit
- ☐ X-2 SureRack Add-on
- ☐ ____ _____

Regulatory Agency Requirements
- ☐ _____

Delta Limited models not approved for use in California

Delta Limited – Type H
Models 989B-2339B

Model _____

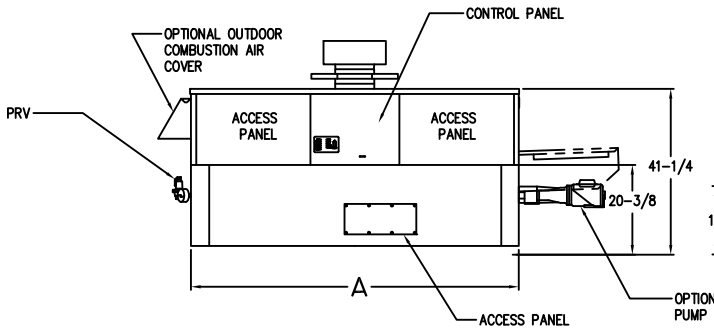

FRONT VIEW

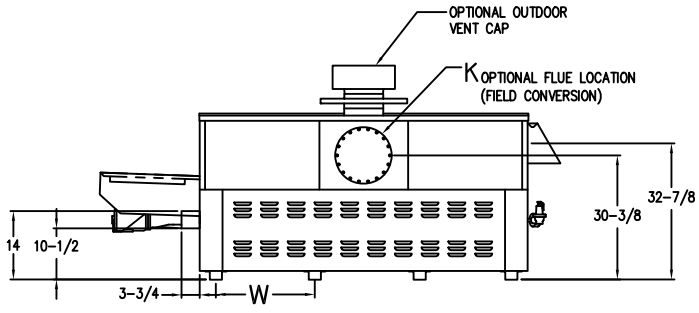

BACK VIEW

NOTE:
Pump location varies based on model selected

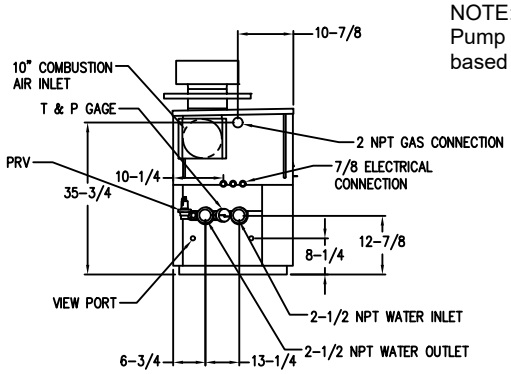

LEFT SIDE

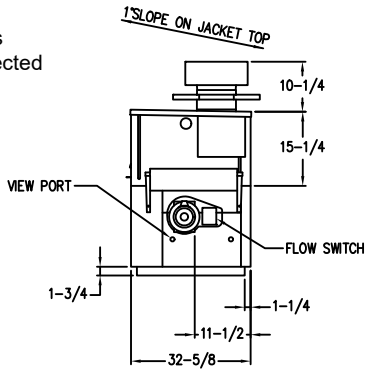

RIGHT SIDE

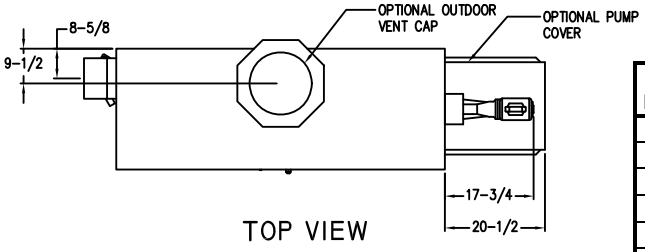

TOP VIEW

RATES OF FLOW AND PRESSURE DROPS

	20°F ΔT		30°F ΔT		Min. Flow			Max. Flow		
Model	GPM	ΔP (ft)	GPM	ΔP (ft)	GPM	ΔP (ft)	ΔT	GPM	ΔP (ft)	ΔT
989B	84	5.6	56	2.5	42	1.5	40	132	14.0	13
1259B	107	10.0	71	4.5	53	2.6	40	132	15.5	16
1529B	130	16.0	86	7.1	65	4.1	40	132	16.5	20
1799B	N/A	N/A	102	10.8	76	6.0	40	132	18.0	23
1999B	N/A	N/A	113	14.0	85	8.1	40	132	19.5	26
2069B	N/A	N/A	117	15.0	88	8.7	40	132	19.5	27
2339B	N/A	N/A	132	21.0	99	12.0	40	132	21.0	30

Basis is 40°F ΔT for minimum flow, 132 GPM for maximum flow.

SPECIFICATIONS

Model	MBTUH Input	MBTUH Output	Firing Stages	A Width	H NPT	K	W	Amp. Draw*	Approx. Shipping Wt. (Lbs.)
989B	990	832	2	57-1/8	2-1/2	10	16-13/16	< 12	900
1259B	1260	1058	3	68-1/2	2-1/2	12	20-9/16	< 12	1010
1529B	1530	1285	4	79-7/8	2-1/2	12	24-3/8	< 12	1225
1799B	1800	1512	4	91-1/8	2-1/2	14	28-1/8	< 12	1350
1999B**	1999	1679	4	102-1/2	2-1/2	14	31-15/16	< 12	1450
2069B	2070	1739	4	102-1/2	2-1/2	14	31-15/16	< 12	1450
2339B	2340	1966	4	113-7/8	2-1/2	16	35-11/16	< 12	1520

* Pump not included

** Natural Gas Only

Dimensions are in inches.

Rates shown are for natural or propane gas, and elevations up to 4,500 feet. For installation above 4,500 feet, please contact manufacturer.

Recommended natural gas supply pressure is 7 – 10.5" WC. Recommended propane gas supply pressure is 11 - 13" WC.

Raypak, Inc. ▪ 2151 Eastman Avenue, Oxnard, CA 93030 ▪ (805) 278-5300 ▪ Fax (800) 872-9725 ▪ www.raypak.com

Catalog No.: 2000.471A Effective: 07-21-10 Replaces: 09-15-07

DeltaCool™

DeltaCool™ Fan Coil
Cooling and Dehumidification

Manage the temperature and humidity in your indoor or greenhouse growing environment for healthier crops.

How Chilled Water Cooling Works

Chilled water cooling from Delta T Solutions is a hydronic process that circulates chilled water through a loop piping system. Circulator pumps force the water through a heat exchanger, and a fan draws warm air out and cools it as it passes over cold coils. By modulating the water temperature to the coil, exact cooling and humidity control can be achieved — a capability especially important for growing healthy cannabis crops.

Fan Coil Advantages

By operating the DeltaCool™ Fan Coil, indoor and greenhouse growers gain the following advantages:

- Precise air temperature and humidity control with one unit
- Available as a 4-ton unit
- Low operating cost due to efficient design
- Easy access to fan and coil via removable air-discharge side, end and front panels
- Overhead suspension points will conserve space and are ideal for ceiling installations where space is limited.
- Drain pan is double sloped to fully remove condensation for optimum mold growth prevention and complies with IAQ standards

Fan Coil Specifications

- Galvanized steel construction
- Front air discharge with bottom air inlet
- Capacity: 1/3hp with 277V, 230V or 208V motor
- Two pipe cooling only model and four pipe cooling and heating model
- Coil connections – ¾” mpt, drain connections – ¾” mpt
- Bottom air intake with mesh-type filter (low MERV / low apd)
- Stainless steel drain pan, positively sloped
- 1/2" fiberglass insulation

4-TON DELTACOOL™ FAN COIL COOLING AND DEHUMIDIFICATION

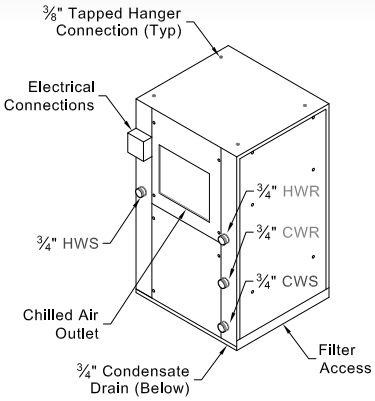

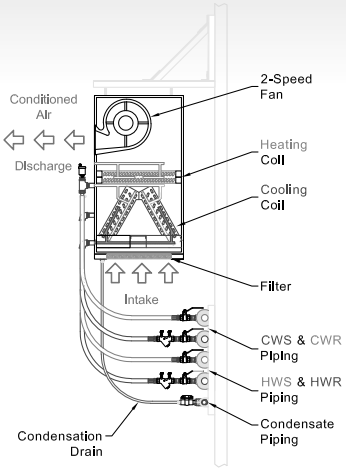

Specifications					
Model Number	**Nominal Size**	**Dimensions**	**Fans (qty)**	**Motor Electrical**	**Net Weight**
SGHO-030B	4 Tons	30" W x 44" H x 27-3/4" D	(1) 1/3hp	277V / 2.2 FLA 230V / 2.8 FLA 208V / 4.0 FLA	250 lbs.
SGHOH-030B	4 Tons w/ Heat Coil	30" W x 44" H x 27-3/4" D	(1) 1/3hp		260 lbs.

Cooling Capacities

Entering Air Dry Bulb Temp	Entering RH	40 °F EWT						42 °F EWT					
		Total Capacity	Sensible Capacity	Latent Capacity	Dehum Rate	Leaving Water Temp	Leaving Dry Bulb	Total Capacity	Sensible Capacity	Latent Capacity	Dehum Rate	Leaving Water Temp	Leaving Dry Bulb
EAT	% RH	MBH	MBH	MBH	PPD	°F	°F	MBH	MBH	MBH	PPD	°F	°F
80 °F	50%	54.6	33.7	20.9	495	55.6	47	51.1	32.1	19	450	56.6	48.5
	55%	58.4	32.8	25.6	607	56.7	47.8	54.9	31.3	23.6	559	57.7	49.3
	60%	62.2	32.1	30.1	713	57.8	48.4	58.6	30.5	28.1	666	58.8	50
75 °F	50%	45.1	30.5	14.6	346	52.9	45.5	41.7	29	12.7	301	53.9	47
	55%	48.2	29.8	18.4	436	53.8	46.1	44.8	28.2	16.6	393	54.8	47.6
	60%	51.5	29.1	22.4	531	54.7	46.7	48	27.6	20.4	484	55.7	48.2
70 °F	50%	36.2	27.1	9.1	216	50.3	44.1	32.7	25.5	7.2	171	51.3	45.6
	55%	38.8	26.4	12.4	294	51.1	44.6	35.3	24.9	10.4	247	52.1	46.1
	60%	41.5	25.9	15.6	370	51.9	45.2	38	24.3	13.7	325	52.9	46.7

All calculations are based on an air flow rate of 1050 CFM and water flow rate of 7 GPM with a water pressure drop of 4.7 ft HD.

Heating Capacities

Entering Air Dry Bulb Temp	Air Flow Rate	Water Flow Rate	180 °F EWT				160 °F EWT				140 °F EWT			
			Total Capacity	Leaving Water Temp	Leaving Dry Bulb	Water Press Drop	Total Capacity	Leaving Water Temp	Leaving Dry Bulb	Water Press Drop	Total Capacity	Leaving Water Temp	Leaving Dry Bulb	Water Press Drop
EAT	CFM	GPM	MBH	°F	°F	Ft WG	MBH	°F	°F	Ft WG	MBH	°F	°F	Ft WG
50°F	1050	3	49.1	146.2	95	0.5	41.2	131.8	87.7	0.5	33.4	117.3	80.6	0.5
55°F	1050	3	46.8	147.8	98	0.5	39	133.3	91.1	0.5	31.3	118.7	84	0.5
60°F	1050	3	44.5	149.4	102	0.5	36.8	134.8	94.5	0.5	29.2	120.1	87.3	0.5
65°F	1050	3	42.3	150.9	105	0.5	34.7	136.3	97.8	0.5	27.2	121.5	90.7	0.5
70°F	1050	3	40.2	152.3	108	0.5	32.7	137.7	101.1	0.5	25.2	122.9	94	0.5

All calculations based on an elevation of 2,000 ft.

Creating custom horticultural heating & cooling solutions for over 30 years

Delta T Solutions
Complete Environmental Control

27711 Diaz Road, Suite B, Temecula, CA 92590 ▪ 800.552.5058 ▪ 760.682.0428 (fax) ▪ www.deltatsolutions.com

LAA-4601-1W

General Informations

Heat Exchange Mode :	**Cooling Mode**	
Model Status :	**Standard Catalog**	
Entering Dry Bulb :	**68.0**	°F
Entering Wet Bulb :	**61.2**	°F
Entering Liquid Temp :	**40.0**	°F
Leaving Liquid Temp :	**45.0**	°F
Max Pressure Drop :	**7.00**	PSI
Altitude :	**0**	Ft
Unit Type :	**Low air walk-in**	
Defrost Type :	**Air defrost**	

Row :	**3**	
Fins / Inch (FPI) :	**6**	
Internal Volume :	**0.98**	Ft³
Fluid Volume :	**7.34**	gal
Estimated Unit Weight :	**355**	lbs

The estimated unit weight does not include options weight.

Fluid Type :	**Propylene Glycol (built in)**	
Concentration :	**30.00**	%

Fan(s) Data

Fan Arrangement :	**1 X 6**	
Fan Motor Total FLA :	**6.00**	A
Opt. Fan Motor Qty :	**6**	

Opt. Fan Motor Type :	**Variable / ECM**	
Opt. Fan Motor HP (HS) :	**0.07**	hp
Opt. Fan Motor RPM (HS) :	**1500**	RPM
Opt. Fan Motor FLA (HS) :	**1.00**	A

Coil(s) Data

Fins Per Inch :	**6 (Standard)**	FPI
Coil Quantity :	**2**	
Connection(s) Quantity :	**1**	
Circuit Quantity :	**36**	

Fin Material :	**Aluminium**	
Fin Type Code :	**E**	
Connection Size In :	**2"**	ø MPT
Connection Size Out :	**2"**	ø MPT

Heater(s) Data

Heater Quantity In Coil :	**0**	
Heater Quantity In Drain Pan :	**0**	

Heater FLA :	**0.00**	A
Heater Total Power (Kw) :	**0.00**	Kw

Outputs

AIR SIDE

Total Heat :	**100.88**	mbh
Sensible Heat :	**70.52**	mbh
Latent Heat :	**30.37**	mbh
Leaving Dry Bulb :	**59.3**	°F
Leaving Wet Bulb :	**56.7**	°F

LIQUID SIDE

Leaving Liquid Temp :		**45.0**	°F
GPM :		**42.24**	
Liquid Velocity :		**1.94**	ft/sec
Liquid Pressure Drop :	**2.21** PSI	**5.10**	Ft(H2O)
Coil Face Area :		**25.00**	Sq. Ft

Electrical Summary Data

Unit Voltage :	**120/1/60**	V
Heater MCA :	**0.00**	A
Heater MOP :	**0**	A
Control Voltage :	**24/1/60**	V

Fan Motor & Ctrl MCA :	**6.25**	A
Fan Motor & Ctrl MOP :	**15.00**	A

PO Box 190511
St Louis, MO 63119 314-647-5361 info@sanitarydesigns.com

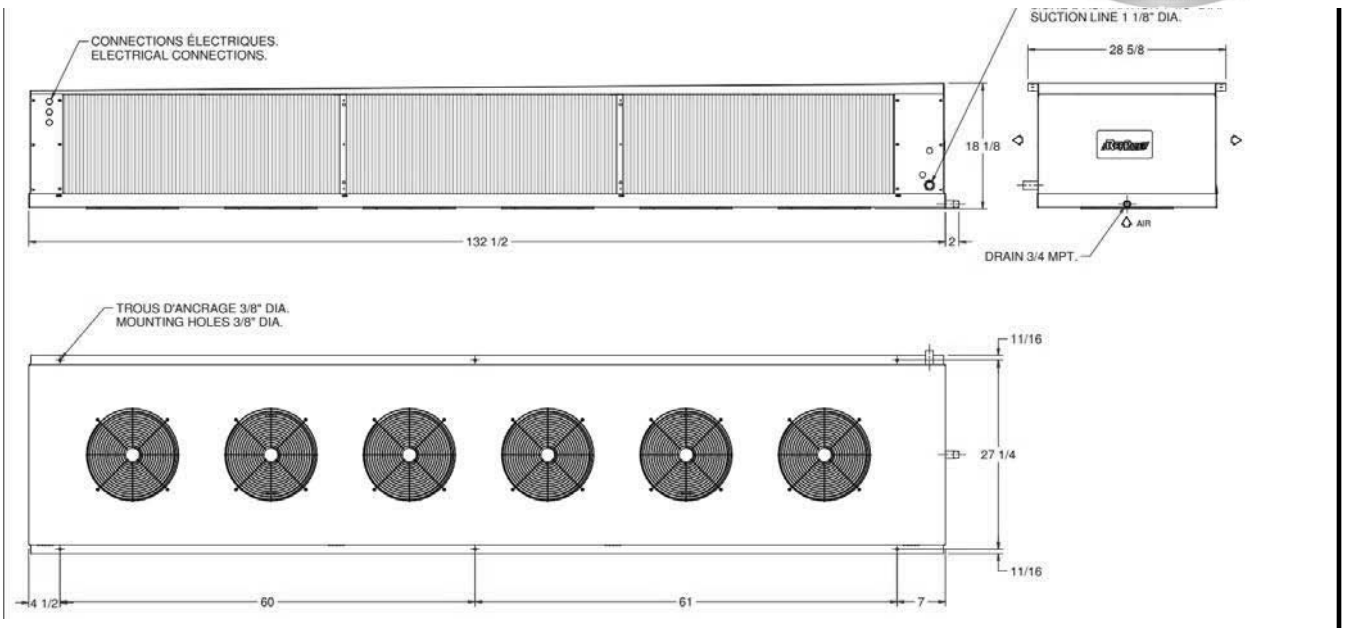

PO Box 190511
St Louis, MO 63119 314-647-5361 info@sanitarydesigns.com

AL

Aluminum Greenhouse Fan

American Coolair's AL all-aluminum fans are the answer to concerns about rust and corrosion in today's damp greenhouse environment. Combined with an aluminum wall housing, an aluminum shutter, and a vinyl coated wire guard, the AL fan will provide years of trouble-free and corrosion-free service.

AL fans feature all-welded angle frame construction for a rugged and durable unit. The fan panel has a deep spun orifice for maximum efficiency.

AL fans utilize Coolair's exclusive drive assembly used on our fans for over 80 years. The die-formed aluminum blades are bolted to a cast aluminum hub, which also serves as the fan pulley. Power is applied through V-belts directly to the propeller with the blade load concentrated directly over the fan bearings, thus eliminating overhung bearing load.

AL fans are available with single- or two-speed totally enclosed motors.

PERFORMANCE RATINGS

AMERICAN COOLAIR CORPORATION certifies that the performance data for the type AL wall fan models shown below are based on tests conducted in an accredited laboratory in accordance with ANSI/AMCA Standard 210-07.

				CUBIC FEET PER MINUTE (CFM) AT STATIC PRESSURE									
Fan Model	Fan Size	Motor HP	Fan RPM	0" S.P.		.05" S.P.		.10" S.P.		.125" S.P.		.15" S.P.	
				CFM	BHP	CFM	BHP	CFM	BHP	CFM	BHP	CFM	BHP
AL24G	24	1/4	688	5,293	0.24	5,026	0.25	4,724	0.26	4,553	0.27	4,362	0.28
AL24H		1/3	769	5,916	0.33	5,680	0.35	5,421	0.36	5,279	0.37	5,128	0.38
AL24J		1/2	891	6,855	0.51	6,654	0.53	6,438	0.55	6,324	0.56	6,205	0.57
AL24K		3/4	1042	8,017	0.83	7,846	0.84	7,574	0.86	7,574	0.87	7,478	0.88
AL30G	30	1/4	491	7,205	0.24	6,625	0.25	5,997	0.27	5,648	0.27	5,239	0.28
AL30H		1/3	531	7,792	0.29	7,258	0.32	6,690	0.33	6,386	0.34	6,056	0.34
AL30J		1/2	641	9,406	0.52	8,968	0.54	8,512	0.56	8,276	0.57	8,034	0.58
AL30K		3/4	739	10,845	0.80	10,466	0.83	10,076	0.85	9,877	0.86	9,674	0.87
AL36H	36	1/3	447	9,735	0.29	9,007	0.32	8,241	0.34	7,773	0.36	7,103	0.38
AL36J		1/2	524	11,411	0.47	10,793	0.51	10,160	0.54	9,832	0.55	9,477	0.56
AL36K		3/4	615	13,393	0.75	12,868	0.80	12,334	0.84	12,063	0.86	11,790	0.87
AL36L		1	692	15,070	1.07	14,604	1.12	14,132	1.18	13,894	1.20	13,654	1.22
AL42H	42	1/3	322	12,106	0.30	10,921	0.33	9,919	0.36	8,430	0.37	7,149	0.39
AL42J		1/2	371	13,948	0.46	12,986	0.49	11,525	0.53	10,797	0.54	10,159	0.56
AL42K		3/4	430	16,166	0.71	15,372	0.75	14,318	0.79	13,625	0.81	12,938	0.83
AL42L		1	492	18,497	1.07	17,821	1.11	17,009	1.15	16,513	1.18	15,932	1.20
AL48J	48	1/2	307	16,740	0.49	15,278	0.52	13,371	0.54	12,370	0.54	11,062	0.56
AL48K		3/4	358	19,521	0.77	18,315	0.82	16,814	0.84	15,964	0.85	15,121	0.85
AL48L		1	408	22,248	1.14	21,212	1.19	20,001	1.23	19,305	1.24	18,565	1.25
AL54L	54	1	374	23,911	1.06	22,693	1.11	21,283	1.16	20,480	1.18	19,618	1.20
AL54M		1 1/2	414	26,496	1.44	25,381	1.50	24,165	1.55	23,491	1.58	22,766	1.60

Plan for Eye Safety

Due to the high intensity lighting utilized in cultivation, eye safety is critical. To address this, HHG has established eye safety protocols to ensure a safe working environment for all cultivation staff.

Safety protocols:

HHG will provide all employees with the necessary protective eyewear. In addition to protective eyewear, HHG will take additional steps to limit employee exposure to high intensity lighting where possible. These steps may include, though not limited to:

- Turning off supplemental lighting during work in rooms when possible.
- When turning lights off is not an option, limiting consecutive time in a room before a required break.
- Scheduling work in greenhouse rooms to avoid times when sunlight is at its peak.

Communication:

Eye safety protocols will be communicated to all staff during initial onboarding. In addition, signage will be placed in relevant areas to remind associates of protective measures. The cultivation director and designated management staff will be responsible for reinforcing the safety protocols.

PPE:

All cultivation staff will be issued protective eyewear suitable for the lighting conditions in our facility. When not in use, protective eyewear will be left onsite, in designated storage. This will ensure PPE is always available for employees, and not forgotten elsewhere. Additional pairs of protective eyewear will be available in case of damaged or compromised eyewear that requires replacement and are available for any visitors.

Signage:

All areas utilizing high intensity lighting will have signage on or near the door stating, “High Intensity Lighting in Use – Proper Eye Protection Required”.